SERIES 'EH' | VERTICAL PUMPS

Chemical Duty Motor (1.0-7.5 Hp.)
Sealed oversized bearings,cast iron end bells, corrosion resistant epoxy coating, & stainless steel nameplate.

185 U.S. GPM or 145 ft. TDH @ 60Hz

In or out-of-tank

PTFE shaft vapor seal
Protects motor bearing from atmosphere

Non-metallic solution contact
High-temp PP, CPVC, PVDF, or ECTFE-T
(See chemical resistance guide T-102)

Choice of 12" or 18" column

Centrifugal
Quiet & vibration free.

Shown w/ Optional Mounting Plate Hole and Discharge Pipe Assy.

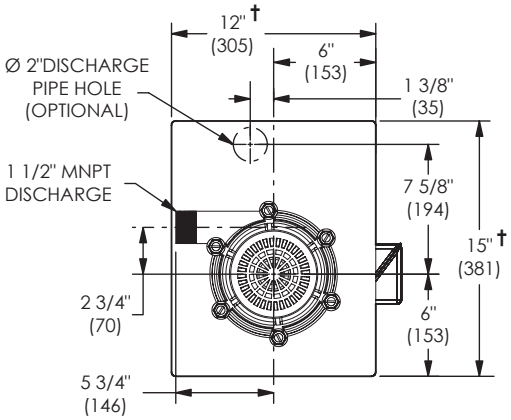

† 12" x 15" (CPVC, PP & ECTFE-T)
11-3/4" x 11-3/4" (PVDF)

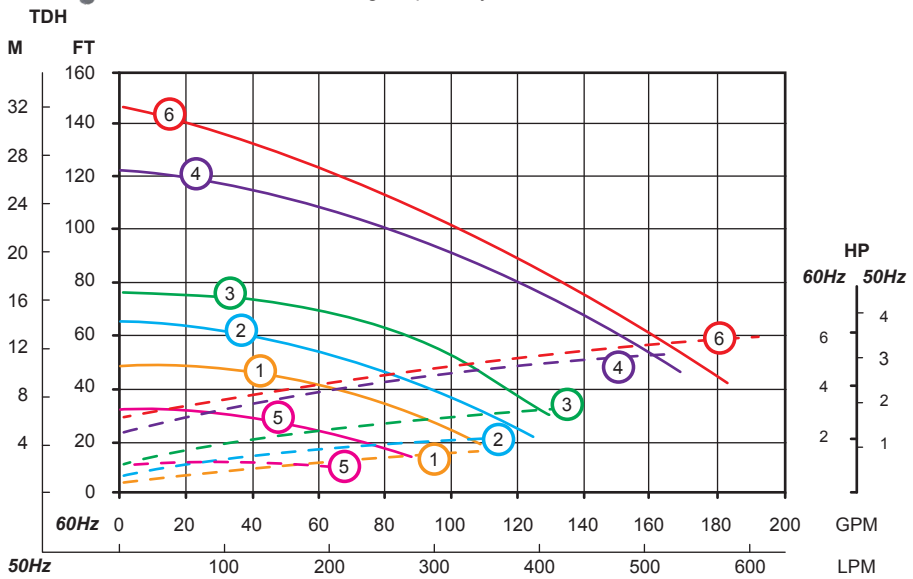

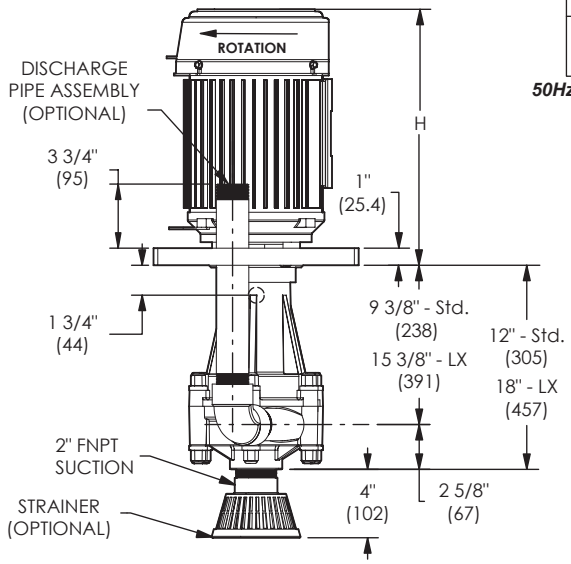

Voltage	HP (kW)	Dimensions: in. (mm) H
208-230/460/3/60, 3450 rpm 190/380/3/50, 2850 rpm	1.0 (.75)	12.5 (317)
	1.5 (1.1)	
	2.0 (1.5)	
	3.0 (2.2)	14.86 (378)
	5.0 (3.7)	
	7.5 (5.5)	
208-230/460/3/60, 1725 rpm 190/380-415/3/50, 1450 rpm	1.5 (1.1)	12.19 (310)
115/208-230/1/60, 3450 rpm 190-230/1/50, 2850 rpm		13.5 (343)
115/208-230/1/60, 1725 rpm 190-230/1/50, 1450 rpm		11.5 (292)

Dimensions are for reference only.
* Motor dimensions will vary with motor manufacturer.

SERIES 'EH' | VERTICAL PUMPS

ORDER INFORMATION

For standard pump-motor combination, select model from table below.
Select flow curve number providing the desired performance. Then match to Model # listed below.
Standard models include: EPDM elastomers (CPVC, PP or ECTFE) & FKM (PVDF)
Motor HP is non-overloading at full capacity with 1.1 specific gravity.

Flow Curve	Model # CPVC/EPDM	PCN	Model # PP/EPDM	PCN	Model # PVDF/FKM	PCN	Model # ECTFE/EPDM	PCN
Standard 60 Hz Models								
1	EH1-1/2-1SC-D1.5	45-0112	EHP1-1/2-1SC-D1.5	45-0612	EHK1-1/2-1SC-D1.5	45-0712	EHH1-1/2-1SC-D1.5	45-1912
2	EH1-1/2-2SC-D2.0	45-0123	EHP1-1/2-2SC-D2.0	45-0623	EHK1-1/2-2SC-D2.0	45-0723	EHH1-1/2-2SC-D2.0	45-1923
3	EH1-1/2-3SC-D3.0	45-0134	EHP1-1/2-3SC-D3.0	45-0634	EHK1-1/2-3SC-D3.0	45-0734	EHH1-1/2-3SC-D3.0	45-1934
4	EH1-1/2-4SC-D5.0	45-0145	EHP1-1/2-4SC-D5.0	45-0645	EHK1-1/2-4SC-D5.0	45-0745	EHH1-1/2-4SC-D5.0	45-1945
5	EH1-1/2-5SC-H1.5	45-0159	EHP1-1/2-5SC-H1.5	45-0659	EHK1-1/2-5SC-H1.5	45-0759	EHH1-1/2-5SC-H1.5	45-1959
6	EH1-1/2-5SC-D7.5	45-0156	EHP1-1/2-5SC-D7.5	45-0656	EHK1-1/2-5SC-D7.5	45-0756	EHH1-1/2-5SC-D7.5	45-1956
Standard 50 Hz Models								
1	EH1-1/2-1SC-D1.0	45-0111	EHP1-1/2-1SC-D1.0	45-0611	EHK1-1/2-1SC-D1.0	45-0711	EHH1-1/2-1SC-D1.0	45-1911
2	EH1-1/2-2SC-D1.5	45-0122	EHP1-1/2-2SC-D1.5	45-0622	EHK1-1/2-2SC-D1.5	45-0722	EHH1-1/2-2SC-D1.5	45-1922
3	EH1-1/2-3SC-D2.0	45-0133	EHP1-1/2-3SC-D2.0	45-0633	EHK1-1/2-3SC-D2.0	45-0733	EHH1-1/2-3SC-D2.0	45-1933
4	EH1-1/2-4SC-D3.0	45-0144	EHP1-1/2-4SC-D3.0	45-0644	EHK1-1/2-4SC-D3.0	45-0744	EHH1-1/2-4SC-D3.0	45-1944
5	EH1-1/2-5SC-H1.5	45-0159	EHP1-1/2-5SC-H1.5	45-0659	EHK1-1/2-5SC-H1.5	45-0759	EHH1-1/2-5SC-H1.5	45-1959
6	EH1-1/2-5SC-D5.0	45-0155	EHP1-1/2-5SC-D5.0	45-0655	EHK1-1/2-5SC-D5.0	45-0755	EHH1-1/2-5SC-D5.0	45-1955

**For custom pump-motor combinations, please consult Serfilco Sales Department. (800) 323 - 5431*
Refer to Technical Bulletin T-P-301

EXTENDED COLUMN MODELS

To add the extended column, remove 45-01, 45-06, or 46-07, and replace PCN with material type below.

MATERIAL	MODEL	PCN
CPVC - 18”	EHLX 1-1/2	45-09
POLYPROPYLENE - 18”	EHPLX 1-1/2	45-13
PVDF - 18”	EHKLX 1-1/2	45-14

OPTIONS

Description		Add Suffix to Model	Add to PCN
Viton 'O'-rings: CPVC & Halar pumps		-V	-V
EPDM 'O'-rings: PP & PVDF pumps		-L	-L
PVDF impeller & shaft sleeve for CPVC pump. *For continuous operation over 180° F*		-K	-K
Titanium - shaft & fasteners		-T	-T
Through hole - standard mounting plate ∅2"		-MPH	-H
Discharge pipe assembly 1-1/2" NPT, for 12" or 18" pump,	CPVC	-DPA	45-0161
For 18" discharge pipe assembly - add X to PCN	PVDF	-DPAK	45-0161-K
	PP	-DPAP	45-0161-P
	SS (For ECTFE-T)	-DPAS	45-0161-S
Suction strainer w/ close nipple, 2" NPT	PE/CPVC	-ST	45-0162
	PE/PP		45-0162-PP
	Halar/PVDF		45-0162-HK
	Halar/SS		45-0162-HS
Suction extension, 24" x 2" NPT	CPVC	-SX	45-0163
	PVDF	-SXK	45-0163-K
	PP	-SXP	45-0163-P