Operation

Husky® 3300 Air-Operated Diaphragm Pump

3A0410H
EN

Heavy-duty 3-inch pump with large flow paths for fluid transfer applications, including high-viscosity materials. For professional use only.

See page 4 for model information, including approvals.

125 psi (0.86 MPa, 8.6 bar) Maximum Working Pressure, Aluminum or Stainless Steel Pumps with Aluminum Center Section
100 psi (0.7 MPa, 6.9 bar) Maximum Working Pressure, Polypropylene or Stainless Steel Pumps with Polypropylene Center Section

Important Safety Instructions
Read all warnings and instructions in this manual. Save these instructions.

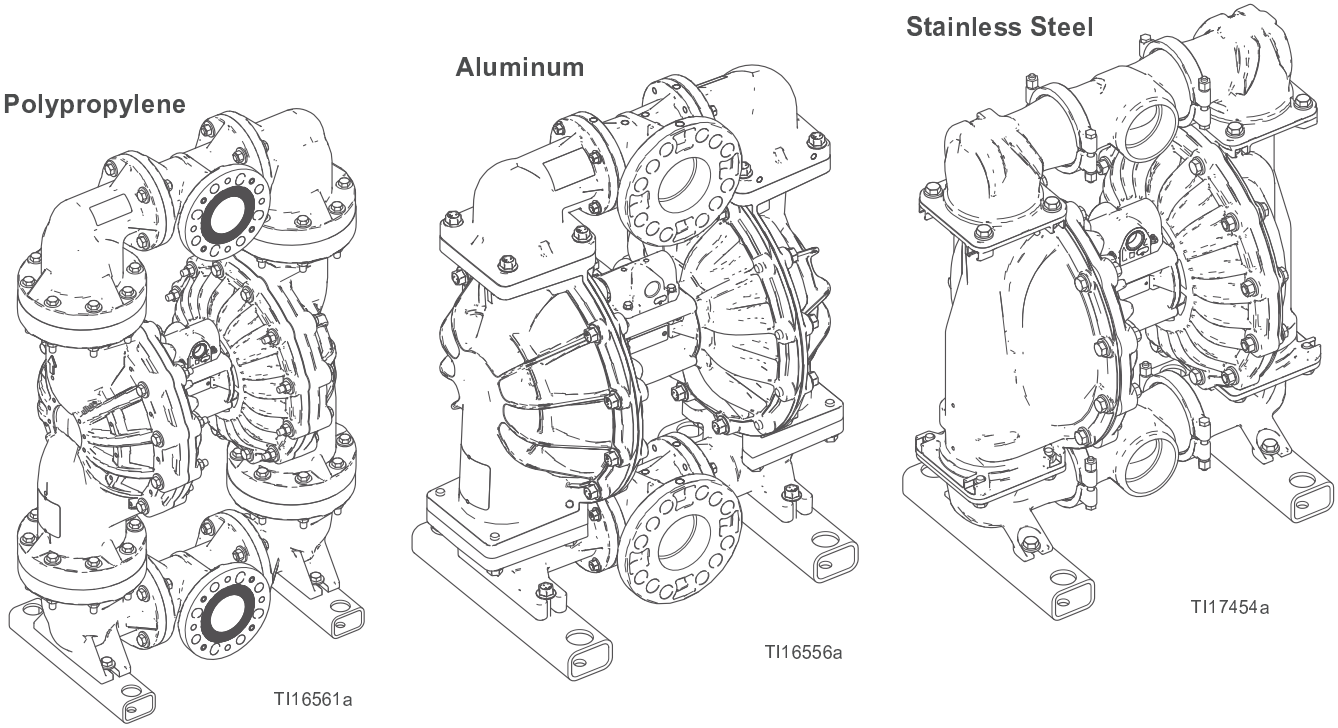

PROVEN QUALITY. LEADING TECHNOLOGY.

Contents

Related Manuals 2
To Find Your Nearest Distributor 3
To Specify the Configuration of a New Pump 3
To Order Replacement Parts 3
Distributor Note 3
Configuration Number Matrix 4
Warnings 5
Installation 8
Overview 8
Tighten Fasteners 9
Tips to Reduce Cavitation 9
Mount the Pump 9
Ground the System 10
Fluid Supply Line 10
Fluid Outlet Line 10
Fluid Inlet and Outlet Ports 10
Air Line 11
Air Exhaust Ventilation 11
Operation 13
Pressure Relief Procedure 13
Flush the Pump Before First Use 13
Start and Adjust the Pump 13
Pump Shutdown 13
Maintenance 14
Maintenance Schedule 14
Lubrication 14
Tighten Threaded Connections 14
Flushing and Storage 14
Torque Instructions 15
Aluminum Pump Dimensions 18
Polypropylene Pump Dimensions 19
Stainless Steel Pump Dimensions 20
Performance Charts 22
Technical Data 23
Graco Standard Husky Pump Warranty 26
Graco Information 26

Related Manuals

Manual	Description
3A0411	Husky 3300 Air-Operated Diaphragm Pump, Repair/Parts

To Find Your Nearest Distributor

1. Visit www.graco.com.
2. Click on **Where to Buy** and use the **Distributor Locator**.

To Specify the Configuration of a New Pump

Please call your distributor.

OR

1. Use the **Online Husky Selector Tool** at wwwd.graco.com/training/husky/index.html.
2. If the link does not work, you will find the selector tool on the **Process Equipment** page at **www.graco.com.**

To Order Replacement Parts

Please call your distributor.

Distributor Note

1. To find part numbers for new pumps or kits, use the **Online Husky Selector Tool.**
2. To find part numbers for replacement parts:
   a. Use the configuration number from the ID plate on the pump. If you only have the Graco 6-digit part number, use the selector tool to find the corresponding configuration number.
   b. Use the Configuration Number Matrix on the next page to understand which parts are described by each digit.
   c. **Use the Repair/Parts Manual.** Refer to the main Parts illustration and to the Parts/Kits Quick Reference. Follow the page references on these two pages for further ordering information, as needed.
3. Please call Graco Customer Service to order.

Configuration Number Matrix

Check the identification plate (ID) for the Configuration Number of your pump. Use the following matrix to define the components of your pump.

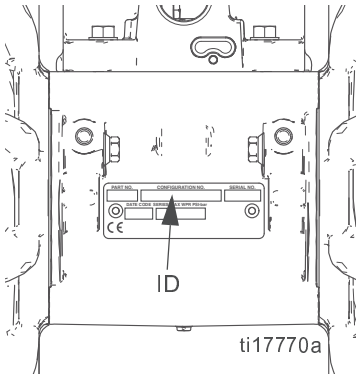

Sample Configuration Number: 3300A-PA01AA1TPACTPBN

3300	A	P	A01A	A1	TP	AC	TP	BN
Pump Size	Wetted Section Material	Drive Type	Center Section and Air Valve	Fluid Covers and Manifolds	Seats	Balls	Diaphragms	Manifold and Seat Seals

Pump Size	Wetted Section Material		Drive Type	Center Section and Air Valve Material		For Use With	Fluid Covers and Manifolds	
3300	A★	Aluminum	P	Aluminum	A01A	Standard Diaphragms	A1	Aluminum, center flange, npt
3300	P†	Polypropylene	Pneumatic		A01E	Optional FKM seals with Standard Diaphragms	A2	Aluminum, center flange, bspt
3300	S★	Stainless Steel			A01G	Overmolded Diaphragms	P1	Polypropylene, center flange
				Polypropyl-ene†	P01A	Standard Diaphragms	S1	Stainless steel, npt
					P01G	Overmolded Diaphragms	S2	Stainless steel, bspt
							S5-1	Stainless steel, center flange

★ *3300A (aluminum) and 3300S (stainless steel) pumps with aluminum center sections are certified:*

II 2 GD c IIC T4

† Pumps with polypropylene fluid or center sections are not ATEX certified.

Check Valve Seats		Check Valve Balls		Diaphragm		Manifold and Seat Seals*	
AC	Acetal	AC	Acetal	BN	Buna-N	BN	Buna-N
AL	Aluminum	BN	Buna-N	CO	Polychloroprene Overmolded	PT	PTFE
BN	Buna-N	CR	Polychloroprene Standard	CR	Polychloroprene		
FK	FKM Fluoroelastomer	CW	Polychloroprene Weighted	FK	FKM Fluoroelastomer		
GE	Geolast®	FK	FKM Fluoroelastomer	GE	Geolast		
PP	Polypropylene	GE	Geolast	PO	PTFE/EPDM Overmolded		
SP	Santoprene®	PT	PTFE	PT	PTFE/Santoprene Two-Piece		
SS	316 Stainless Steel	SP	Santoprene	SP	Santoprene		
TP	TPE	TP	TPE	TP	TPE		

** Models with Buna-N, FKM Fluoroelastomer or TPE seats do not use o-rings.*

Warnings

The following warnings are for the setup, use, grounding, maintenance, and repair of this equipment. The exclamation point symbol alerts you to a general warning and the hazard symbols refer to procedure-specific risks. When these symbols appear in the body of this manual, refer back to these Warnings. Product-specific hazard symbols and warnings not covered in this section may appear throughout the body of this manual where applicable.

⚠ WARNING

FIRE AND EXPLOSION HAZARD

Flammable fumes, such as solvent and paint fumes, in **work area** can ignite or explode. To help prevent fire and explosion:

- Use equipment only in well ventilated area.
- Eliminate all ignition sources; such as pilot lights, cigarettes, portable electric lamps, and plastic drop cloths (potential static arc).
- Keep work area free of debris, including solvent, rags and gasoline.
- Do not plug or unplug power cords, or turn power or light switches on or off when flammable fumes are present.
- Ground all equipment in the work area. See **Grounding** instructions.
- Use only grounded hoses.
- Hold gun firmly to side of grounded pail when triggering into pail. Do not use pail liners unless they are antistatic or conductive.
- **Stop operation immediately** if static sparking occurs or you feel a shock**.** Do not use equipment until you identify and correct the problem.
- Keep a working fire extinguisher in the work area.
- Route exhaust away from all ignition sources. If diaphragm ruptures, fluid may be exhausted with air.

Static charge may build up on plastic parts during cleaning and could discharge and ignite flammable vapors. To help prevent fire and explosion:

- Clean plastic parts only in a well ventilated area.
- Do not clean with a dry cloth.
- Do not operate electrostatic guns in equipment work area.

PRESSURIZED EQUIPMENT HAZARD

Fluid from the equipment, leaks, or ruptured components can splash in the eyes or on skin and cause serious injury.

- Follow the **Pressure Relief Procedure** when you stop spraying/dispensing and before cleaning, checking, or servicing equipment.
- Tighten all fluid connections before operating the equipment.
- Check hoses, tubes, and couplings daily. Replace worn or damaged parts immediately.

⚠ WARNING

EQUIPMENT MISUSE HAZARD

Misuse can cause death or serious injury.

- Do not operate the unit when fatigued or under the influence of drugs or alcohol.
- Do not exceed the maximum working pressure or temperature rating of the lowest rated system component. See **Technical Data** in all equipment manuals.
- Use fluids and solvents that are compatible with equipment wetted parts. See **Technical Data** in all equipment manuals. Read fluid and solvent manufacturer's warnings. For complete information about your material, request MSDS from distributor or retailer.
- Do not leave the work area while equipment is energized or under pressure.
- Turn off all equipment and follow the **Pressure Relief Procedure** when equipment is not in use.
- Check equipment daily. Repair or replace worn or damaged parts immediately with genuine manufacturer's replacement parts only.
- Do not alter or modify equipment. Alterations or modifications may void agency approvals and create safety hazards.
- Make sure all equipment is rated and approved for the environment in which you are using it.
- Use equipment only for its intended purpose. Call your distributor for information.
- Route hoses and cables away from traffic areas, sharp edges, moving parts, and hot surfaces.
- Do not kink or over bend hoses or use hoses to pull equipment.
- Keep children and animals away from work area.
- Comply with all applicable safety regulations.

THERMAL EXPANSION HAZARD

Fluids subjected to heat in confined spaces, including hoses, can create a rapid rise in pressure due to the thermal expansion. Over-pressurization can result in equipment rupture and serious injury.

- Open a valve to relieve the fluid expansion during heating.
- Replace hoses proactively at regular intervals based on your operating conditions.

PRESSURIZED ALUMINUM PARTS HAZARD

Use of fluids that are incompatible with aluminum in pressurized equipment can cause serious chemical reaction and equipment rupture. Failure to follow this warning can result in death, serious injury, or property damage.

- Do not use 1,1,1-trichloroethane, methylene chloride, other halogenated hydrocarbon solvents or fluids containing such solvents.
- Many other fluids may contain chemicals that can react with aluminum. Contact your material supplier for compatibility.

PLASTIC PARTS CLEANING SOLVENT HAZARD

Many solvents can degrade plastic parts and cause them to fail, which could cause serious injury or property damage.

- Use only compatible water-based solvents to clean plastic structural or pressure-containing parts.
- See **Technical Data** in this and all other equipment instruction manuals. Read fluid and solvent manufacturer's MSDSs and recommendations.

⚠ WARNING

	TOXIC FLUID OR FUMES HAZARD Toxic fluids or fumes can cause serious injury or death if splashed in the eyes or on skin, inhaled, or swallowed. • Read MSDSs to know the specific hazards of the fluids you are using. • Route exhaust away from work area. If diaphragm ruptures, fluid may be exhausted into the air. • Store hazardous fluid in approved containers, and dispose of it according to applicable guidelines.
	BURN HAZARD Equipment surfaces and fluid that's heated can become very hot during operation. To avoid severe burns: • Do not touch hot fluid or equipment.
	PERSONAL PROTECTIVE EQUIPMENT Wear appropriate protective equipment when in the work area to help prevent serious injury, including eye injury, hearing loss, inhalation of toxic fumes, and burns. This equipment includes but is not limited to: • Protective eyewear, and hearing protection. • Respirators, protective clothing, and gloves as recommended by the fluid and solvent manufacturer.

Installation

Overview

The Typical Installation shown in FIG. 1 is only a guide for selecting and installing system components. Contact your Graco distributor for assistance in planning a system to suit your needs.

Reference letters in the text, for example (A), refer to the callouts in the figures.

Key:

Accessories/Components Not Supplied

A Air supply line
B Bleed-type master air valve (may be required for your pump installation)
C Air filter/regulator assembly
D Master air valve (to isolate the filter/regulator for service)
E Grounded, flexible fluid supply line
F Fluid drain valve (may be required for your pump installation)
G Fluid shutoff valve
H Grounded, flexible fluid outlet line

System Components

J Air inlet port (not visible)
K Air outlet port and muffler
L Fluid inlet port
M Fluid outlet port
N Ground screw (Aluminum and stainless steel only, see FIG. 3, page 10)
P Mounting brackets

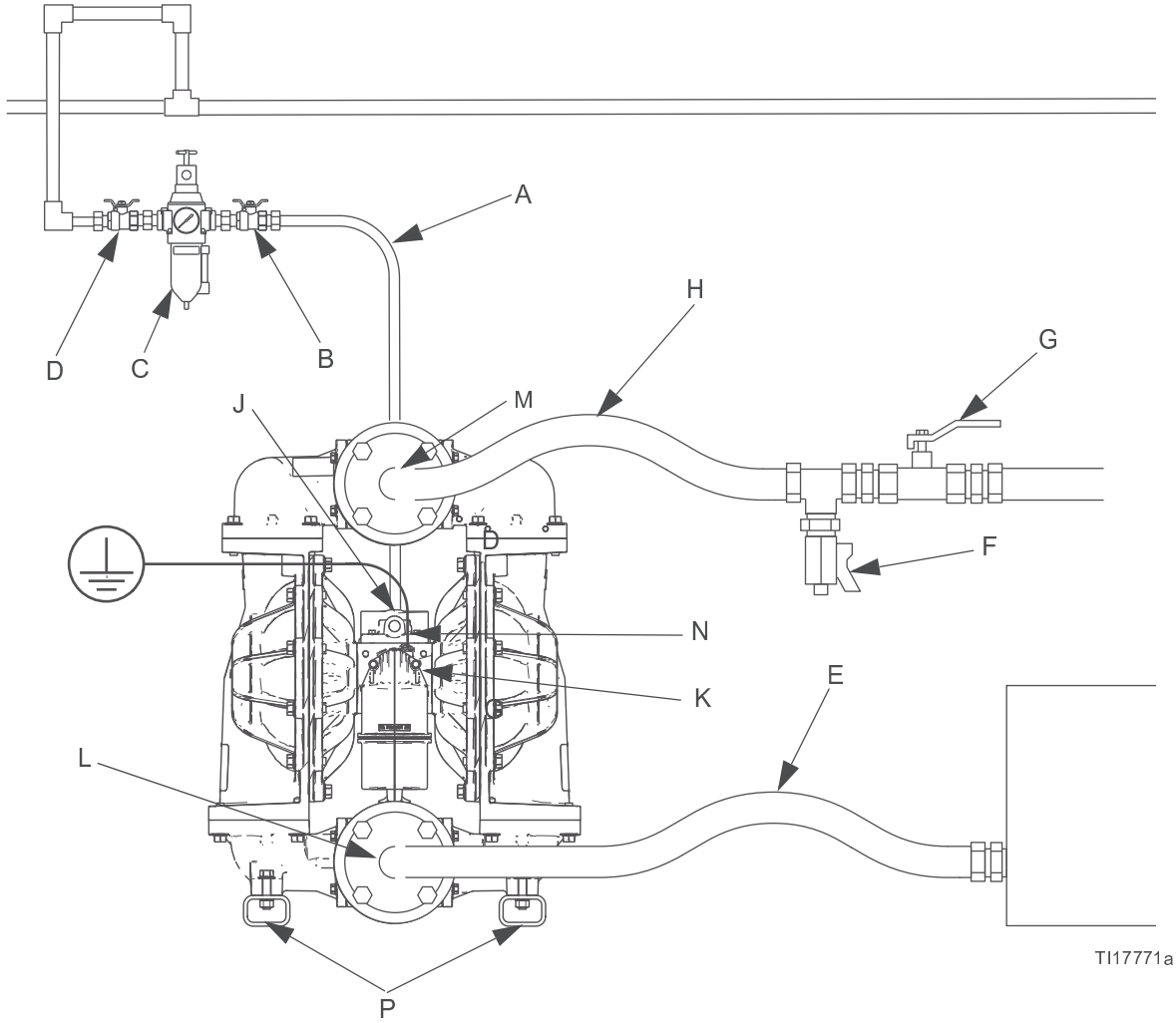

FIG. 1. Typical Installation (aluminum pump shown)

Tighten Fasteners

Before mounting and using the pump for the first time, check and retorque all external fasteners. Follow **Torque Instructions**, page 15, or see the torque tag on your pump. After the first day of operation retorque the fasteners.

Tips to Reduce Cavitation

Cavitation in a diaphragm pump is the formation and collapse of bubbles in the pumped liquid. Frequent or excessive cavitation can cause serious damage, including pitting and early wear of fluid chambers, balls, and seats. It may result in reduced efficiency of the pump. Cavitation damage and reduced efficiency both result in increased operating costs.

Cavitation depends on the vapor pressure of the pumped liquid, the system suction pressure, and the velocity pressure. It can be reduced by changing any of these factors.

1. Reduce vapor pressure: Decrease the temperature of the pumped liquid.
2. Increase suction pressure:
   a. Lower the installed position of the pump relative to the liquid level in the supply.
   b. Reduce the friction length of the suction piping. Remember that fittings add friction length to the piping. Reduce the number of fittings to reduce the friction length.
   c. Increase the size of the suction piping.
   NOTE: Be sure the inlet fluid pressure does not exceed 25 % of the outlet working pressure.
3. Reduce liquid velocity: Slow the cyclic rate of the pump.

Pumped liquid viscosity is also very important but normally is controlled by factors that are process dependent and cannot be changed to reduce cavitation. Viscous liquids are more difficult to pump and more prone to cavitation.

Graco recommends taking all the above factors into account in system design. To maintain pump efficiency, supply only enough air pressure to the pump to achieve the required flow.

Graco distributors can supply site specific suggestions to improve pump performance and reduce operating costs.

Mount the Pump

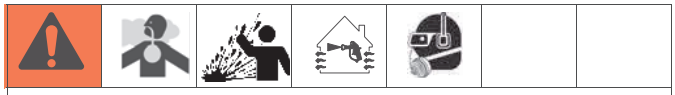

To avoid serious injury or death from toxic fluid or fumes:

- Ventilate to a remote area. The pump exhaust air may contain contaminants. See **Air Exhaust Ventilation** on page 11.
- Never move or lift a pump under pressure. If dropped, the fluid section may rupture. Always follow the **Pressure Relief Procedure** on page 13 before moving or lifting the pump.

1. Verify that the bolts holding the pump feet to the brackets are tight. Torque to 40-45 ft-lb (54-61 N•m) for Polypropylene and Stainless Steel, and 55-60 ft-lb (75-81 N•m) for Aluminum.
2. Secure the brackets to the floor. Do not mount on any other surface. The pump must be mounted upright.

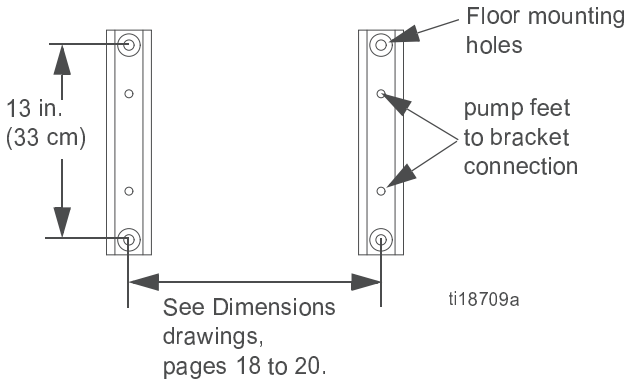

FIG. 2. Mounting Diagram

3. Make sure the surface is flat and that the pump does not wobble.
4. For ease of operation and service, mount the pump so air valve, air inlet, fluid inlet, and fluid outlet ports are easily accessible.

Ground the System

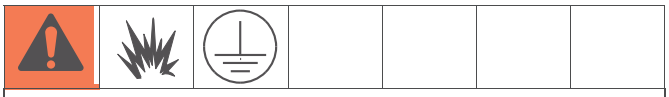

The equipment must be grounded to reduce the risk of static sparking. Static sparking can cause fumes to ignite or explode. Grounding provides an escape wire for the electric current.

- Aluminum and stainless steel pumps have a ground screw. **Always** ground the entire fluid system as described below.
- Polypropylene pumps are **not** conductive and are not for use with flammable fluids.
- Follow your local fire codes.

Pump: See FIG. 3. Loosen the ground screw (N). Insert one end of a 12 ga. minimum ground wire behind the ground screw and tighten the screw securely. Connect the clamp end of the ground wire to a true earth ground. A ground wire and clamp, Part 238909, is available from Graco.

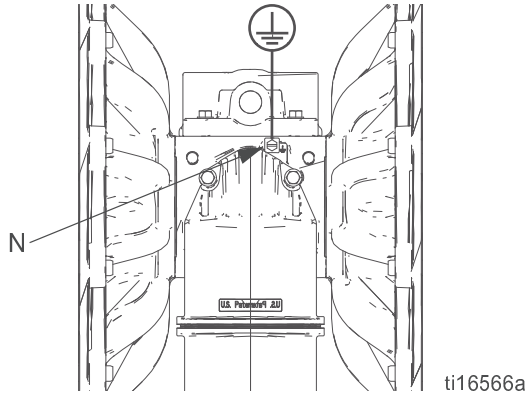

FIG. 3. Ground screw and wire

Air and fluid hoses: Use only grounded hoses with a maximum of 500 ft (150 m) combined hose length to ensure grounding continuity.

Air compressor: Follow manufacturer's recommendations.

Fluid supply container: Follow local code.

Solvent containers used when flushing: Follow local code. Use only conductive metal containers, placed on a grounded surface. Do not place the container on a nonconductive surface, such as paper or cardboard, which interrupts grounding continuity.

Check your system electrical continuity after the initial installation, and then set up a regular schedule for checking continuity to be sure proper grounding is maintained.

Fluid Supply Line

1. Use grounded, flexible fluid hoses (E). See **Ground the System**, page 10.
2. If the inlet fluid pressure to the pump is more than 25% of the outlet working pressure, the ball check valves will not close fast enough, resulting in inefficient pump operation. Excessive inlet fluid pressure also will shorten diaphragm life. Approximately 3-5 psi (0.02-0.03 MPa, 0.21-0.34 bar) should be adequate for most materials.
3. For maximum suction lift (wet and dry), see **Technical DataGraco Standard Husky Pump Warranty**, page 23. For best results, always install the pump as close as possible to the material source. Minimize suction requirements to maximize pump performance.

Fluid Outlet Line

1. Use grounded, flexible fluid hoses (H). See **Ground the System**, page 10.
2. Install a fluid drain valve (F) near the fluid outlet.
3. Install a shutoff valve (G) in the fluid outlet line.

Fluid Inlet and Outlet Ports

NOTE: Remove and rotate the center manifold(s) to change the orientation of inlet or outlet port(s). Follow **Torque Instructions** on page 15.

Aluminum (3300A)

The fluid inlet and outlet manifolds each have a 3 in. ANSI/DIN center flange with either 3 in.-8 npt or 3 in.-11 bspt internal threads.

Polypropylene (3300P)

The fluid inlet and outlet manifolds each have a 3 in. raised face ANSI/DIN center flange.

NOTICE

Use even and opposite torque to connect to the polypropylene manifold flange. Excessive uneven force can damage the flange.

Stainless Steel (3300S)

The fluid inlet and outlet manifolds each have 3 in.-8 npt, 3 in.-11 bspt, or ANSI/DIN flanged ports.

Air Line

1. Install an air regulator and gauge (C) to control the fluid pressure. The fluid stall pressure will be the same as the setting of the air regulator.
2. Locate a bleed-type master air valve (B) close to the pump and use it to relieve trapped air. Be sure the valve is easily accessible from the pump and located downstream from the regulator.

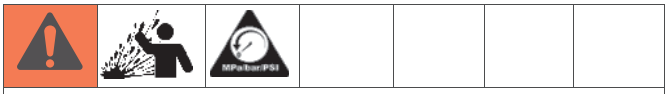

Trapped air can cause the pump to cycle unexpectedly, which could result in serious injury from splashing.

3. Locate another master air valve (D) upstream from all air line accessories and use it to isolate them during cleaning and repair.
4. An air line filter (C) removes harmful dirt and moisture from the compressed air supply.
5. Install a grounded, flexible air hose (A) between the accessories and the 3/4 npt(f) pump air inlet.

Air Exhaust Ventilation

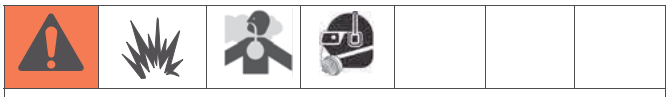

If pumping flammable or toxic fluids, you must vent the exhaust away from people, animals, food handling areas, and all sources of ignition. Follow all applicable codes.

NOTICE

The air exhaust port is 1 npt. Do not restrict the air exhaust port. Excessive exhaust restriction can cause erratic pump operation and poor diaphragm life.

To provide a remote exhaust:

1. Remove the muffler (U) from the pump air exhaust port (K).
2. Install a grounded air exhaust hose (S) and connect the muffler (U) to the other end of the hose. Use muffler PN 111897, sold separately. The minimum size for the air exhaust hose is 1 in. (25 mm) ID. If a hose longer than 15 ft (4.57 m) is required, use a larger diameter hose. Avoid sharp bends or kinks in the hose.
3. Place a container (T) at the end of the air exhaust line to catch fluid in case a diaphragm ruptures. If the diaphragm ruptures, the fluid being pumped will exhaust with the air.

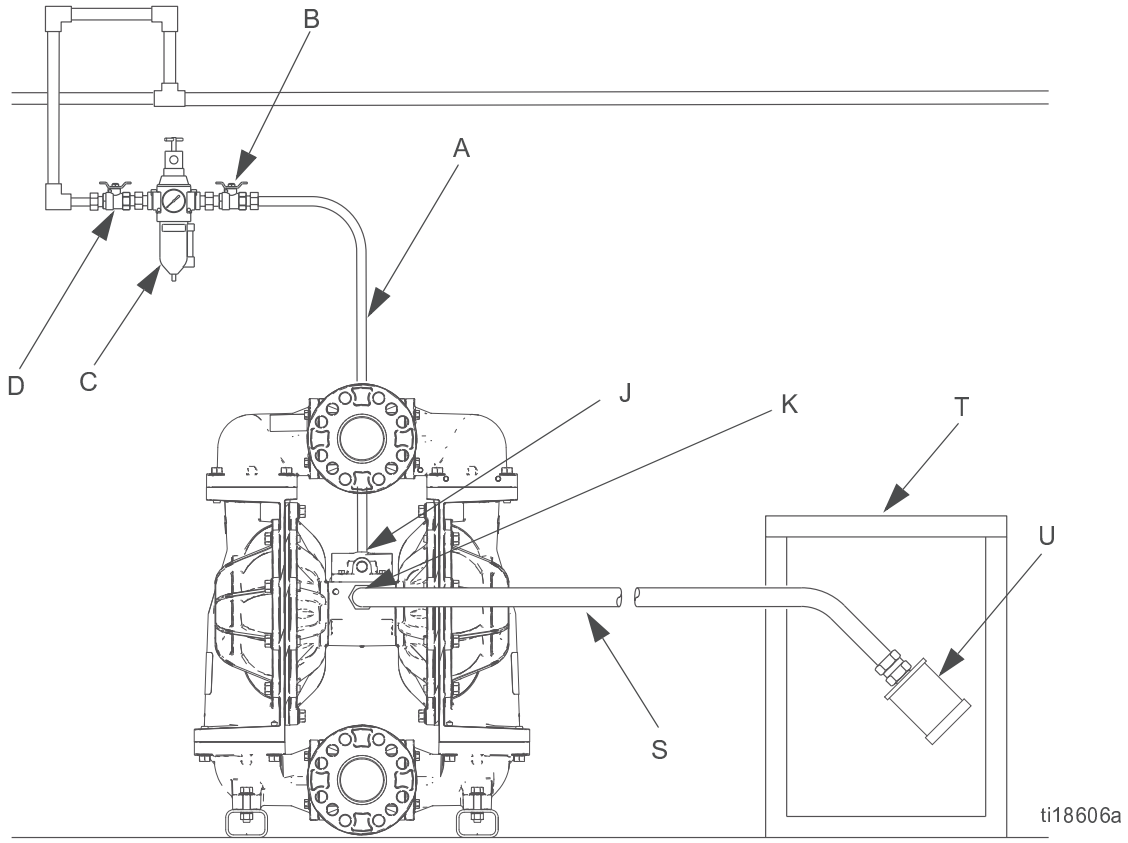

Key:

A Air supply line
B Bleed-type master air valve (may be required for your pump installation)
C Air filter/regulator assembly
D Master air valve (for accessories)
J Air inlet port (not visible)
K Air outlet port
S Grounded air exhaust hose
T Container for remote air exhaust
U Muffler

FIG. 4. Vent exhaust air

Operation

Pressure Relief Procedure

Follow the Pressure Relief Procedure whenever you see this symbol.

This equipment stays pressurized until pressure is relieved manually. To help prevent serious injury from pressurized fluid, such as splashing in the eyes or on skin, follow the Pressure Relief Procedure whenever you stop pumping and before you clean, check, or service the equipment.

1. Shut off the air supply to the pump.
2. Open the dispensing valve, if used.
3. Open the fluid drain valve (F) to relieve fluid pressure. Have a container ready to catch the drainage.

Flush the Pump Before First Use

The pump was tested in water. If water could contaminate the fluid you are pumping, flush the pump thoroughly with a compatible solvent. See **Flushing and Storage**, page 14.

Start and Adjust the Pump

1. Be sure the pump is properly grounded. Refer to **Ground the System** on page 10.
2. Check fittings to be sure they are tight. Use a compatible liquid thread sealant on male threads. Tighten fluid inlet and outlet fittings securely.

Pump Shutdown

At the end of the work shift and before you check, adjust, clean or repair the system, follow the **Pressure Relief Procedure**, page 13.

3. Place the suction tube (if used) in fluid to be pumped.

NOTE: If fluid inlet pressure to the pump is more than 25% of outlet working pressure, the ball check valves will not close fast enough, resulting in inefficient pump operation.

NOTICE
Excessive fluid inlet pressure can reduce diaphragm life.

4. Place the end of the fluid hose into an appropriate container.
5. Close the fluid drain valve (F).
6. Back out the air regulator knob (C), and open all bleed-type master air valves (B, D).
7. If the fluid hose has a dispensing device, hold it open.
8. Slowly increase air pressure with the air regulator until the pump just starts to cycle. Allow the pump to cycle slowly until all air is pushed out of the lines and the pump is primed.

NOTE: Use lowest possible air pressure to prime, just enough to cycle the pump. If the pump does not prime as expected, turn air pressure **DOWN.**

9. If you are flushing, run the pump long enough to thoroughly clean the pump and hoses.
10. Close the bleed-type master air valve (B).

Maintenance

Maintenance Schedule

Establish a preventive maintenance schedule based on the pump's service history. Scheduled maintenance is especially important to prevent spills or leakage due to diaphragm failure.

Lubrication

The pump is lubricated at the factory. It is designed to require no further lubrication for the life of the packings. There is no need to add an inline lubricator under normal operating conditions.

Tighten Threaded Connections

Before each use, check all hoses for wear or damage and replace as necessary. Check to be sure all threaded connections are tight and leak-free. Check mounting bolts. Check fasteners. Tighten or retorque as necessary. Although pump use varies, a general guideline is to retorque fasteners every two months. See **Torque Instructions**, page 15.

Flushing and Storage

- Flush before fluid can dry in the equipment, at the end of the day, before storing, and before repairing equipment.
- Flush at the lowest pressure possible. Check connectors for leaks and tighten as necessary.
- Flush with a fluid that is compatible with the fluid being dispensed and the equipment wetted parts.
- Always flush the pump and relieve the pressure before storing it for any length of time.

NOTICE

Flush the pump often enough to prevent the fluid you are pumping from drying or freezing in the pump and damaging it. Use a compatible solvent.

Torque Instructions

See FIG. 5 for fluid cover and air valve fasteners. See FIG. 6 for manifold fasteners.

NOTE: Fluid cover and manifold fasteners on the polypropylene pumps have a thread-locking adhesive patch applied to the threads. If this patch is excessively worn, the fasteners may loosen during operation. Replace screws with new ones or apply medium-strength (blue) thread locker or equivalent to the threads.

If fluid cover or manifold fasteners have been loosened, it is important to torque them using the following procedure to improve sealing.

NOTE: Always completely torque fluid covers, then torque the manifold pieces together, then torque the assembled manifolds to the fluid covers.

Start all fluid cover screws a few turns. Then turn down each screw just until head contacts cover. Then turn each screw by 1/2 turn or less working in a crisscross pattern to specified torque. Repeat for manifolds.

Fluid cover fasteners:
- **Polypropylene and Stainless Steel:** 40-45 ft-lb (54-61 N•m)
- **Aluminum:** 55-60 ft-lb (75-81 N•m)

Manifold fasteners:
Polypropylene: 40-45 ft-lb (54-61 N•m)
Aluminum:
- **Refs 1-8:** 11-21 ft-lb (15-28 N•m)
- **Refs 9-16:** 55-60 ft-lb (75-81 N•m)

Stainless Steel:
- **Refs 1-4:** 110-120 in-lb (12-13 N•m)
- **Refs 5-12:** 40-45 ft-lb (54-61 N•m)

Retorque the air valve fasteners in a crisscross pattern to specified torque.

Air Valve fasteners
- **Plastic Center Sections:** 45-55 in-lb (5-6.2 N•m)
- **Aluminum Center Sections:** 75-85 in-lb (8.5-9.6 N•m)

Also check and tighten the nuts or bolts (X) holding the manifold feet to the mounting brackets.

Fluid Cover Screws

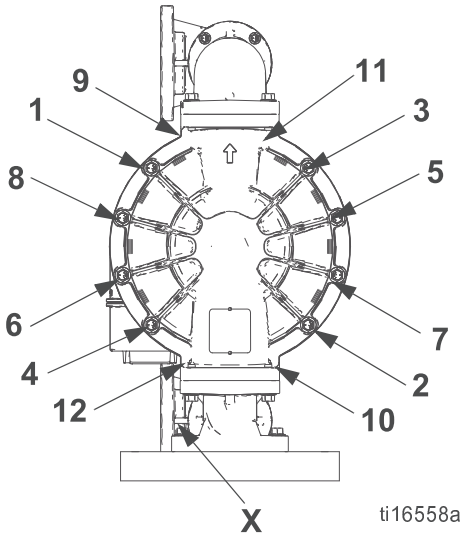

Air Valve Screws

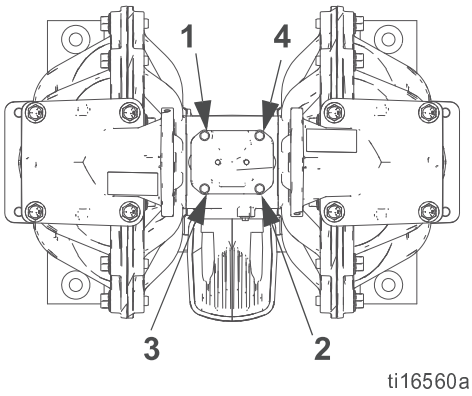

FIG. 5. Torque instructions, Fluid Covers and Air Valve Fasteners (all models, aluminum shown)

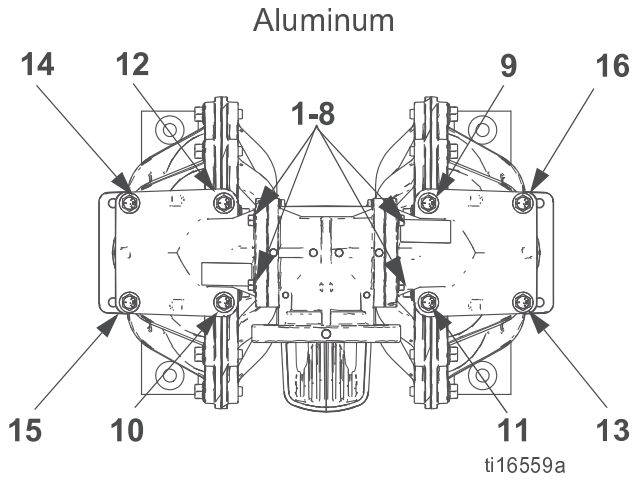

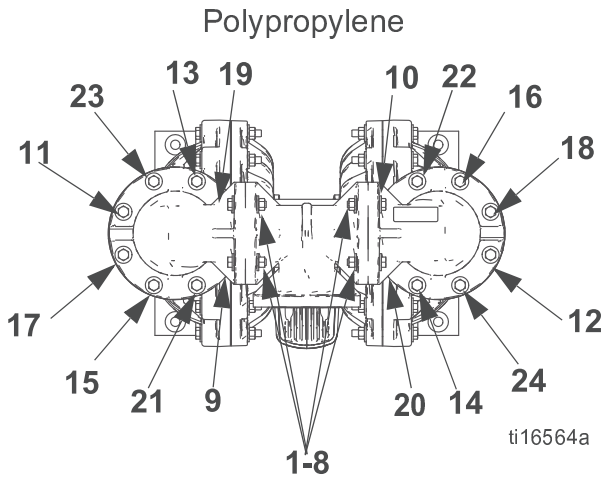

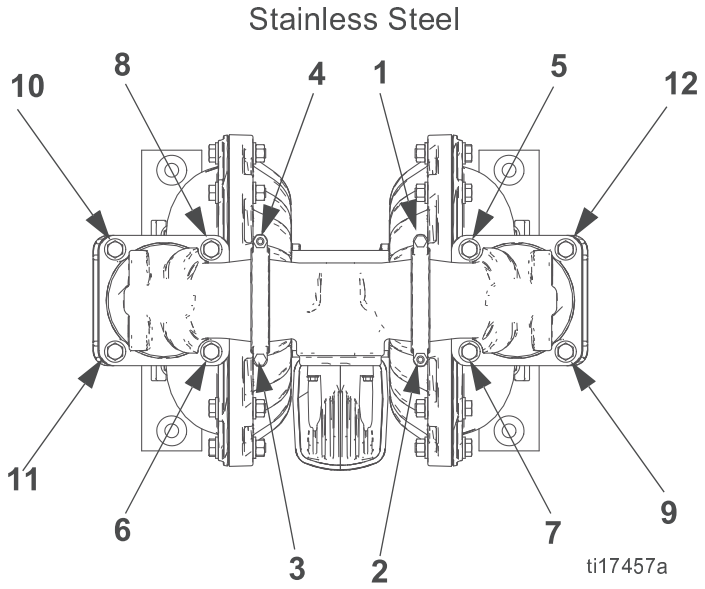

FIG. 6. Torque Instructions - Manifold Fasteners

NOTES

Aluminum Pump Dimensions

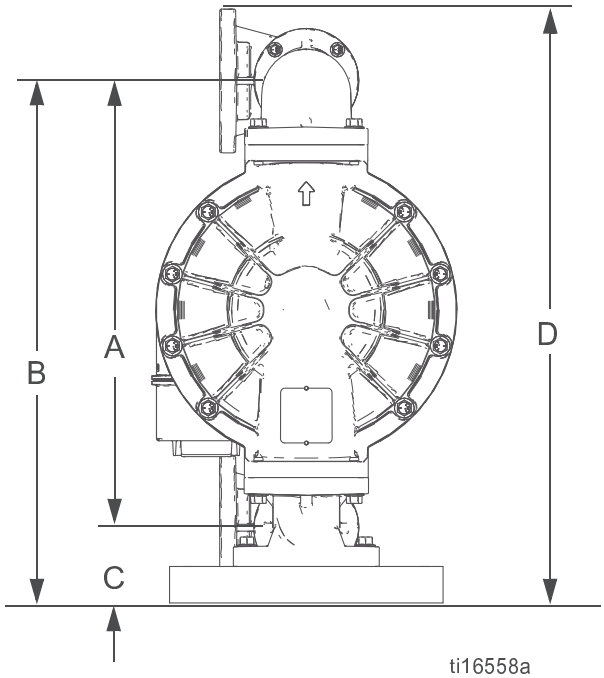

ti16558a

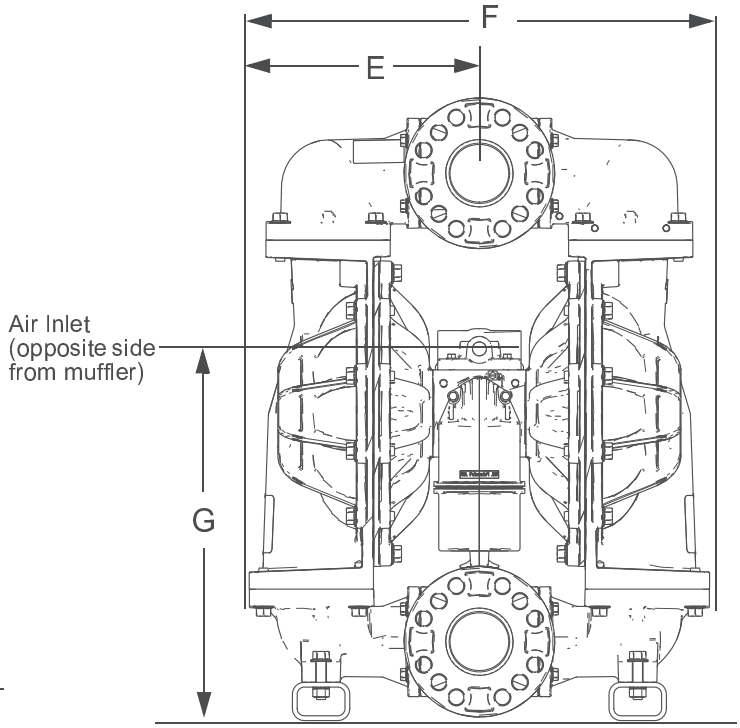

ti16557a

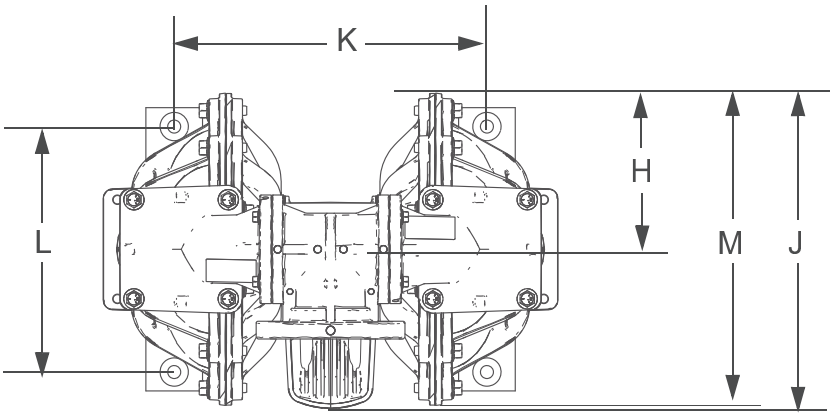

ti16559a

A	24.50 in. (62.2 cm)
B	28.63 in. (72.7 cm)
C	4.13 in. (10.5 cm)
D	32.56 in. (82.7 cm)
E	12.04 in. (30.6 cm)
F	24.08 in. (61.2 cm)

G	19.70 in. (50.0 cm)
H	8.25 in. (21.0 cm)
J	16.91 in. (42.9 cm)
K	16.56 in. (42.1 cm)
L	13.00 in. (33.0 cm)
M	16.5 in. (41.9 cm)

Polypropylene Pump Dimensions

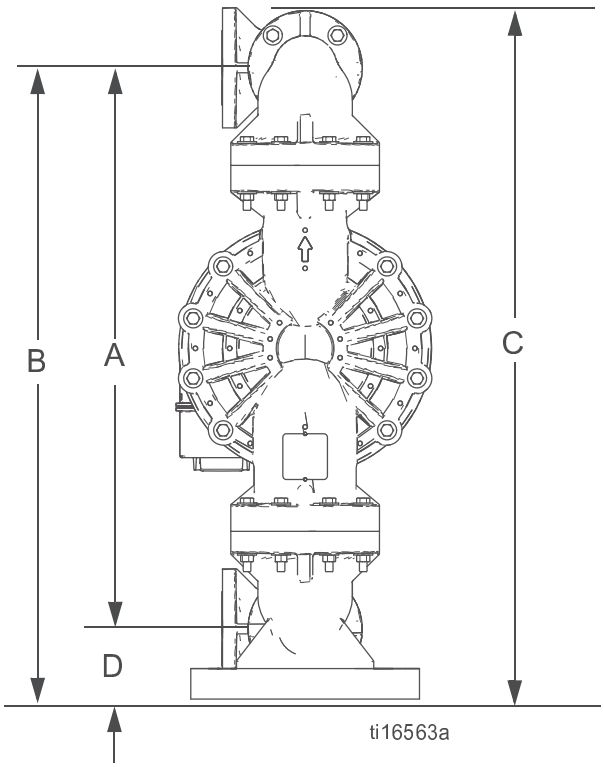

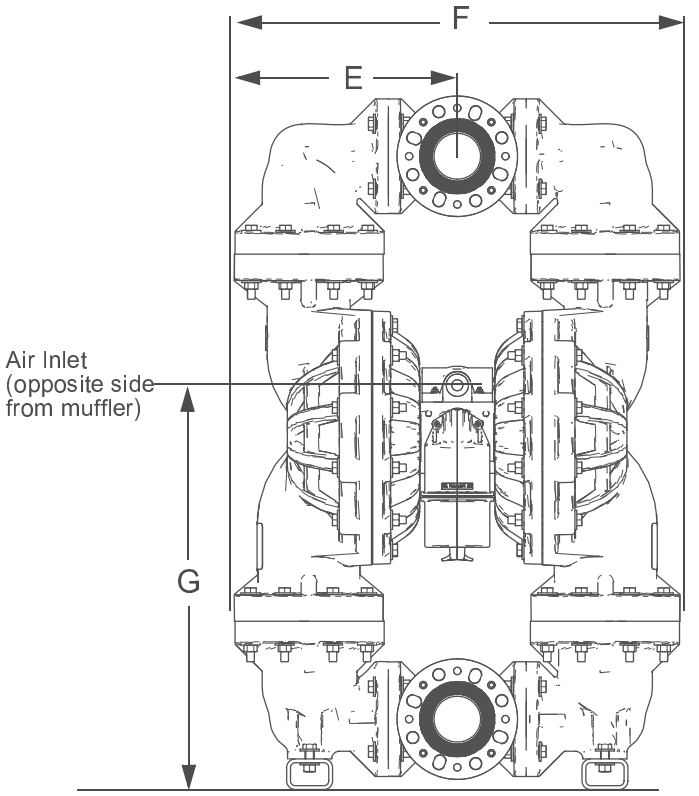

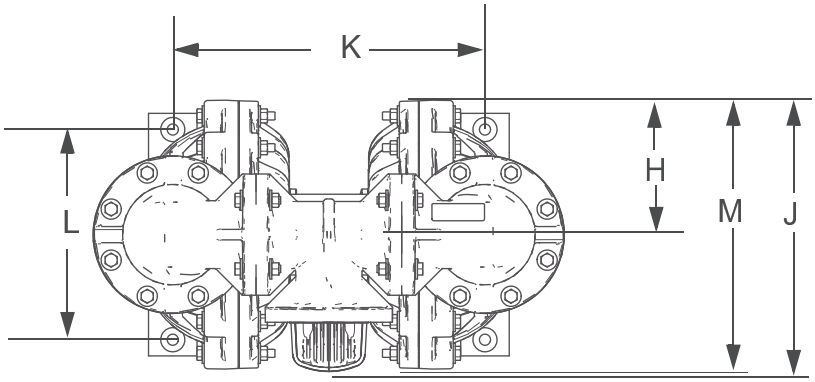

A	36.80 in. (93.5 cm)
B	41.40 in. (105.2 cm)
C	45.34 in. (115.2 cm)
D	4.60 in. (11.7 cm)
E	14.56 in. (37.0 cm)
F	29.12 in. (74.0 cm)

G	26.69 in. (67.8 cm)
H	8.30 in. (21.1 cm)
J	16.96 in. (43.1 cm)
K	19.31 in. (49.0 cm)
L	13.00 in. (33.0 cm)
M	16.58 in. (42.1 cm)

Stainless Steel Pump Dimensions (threaded ports)

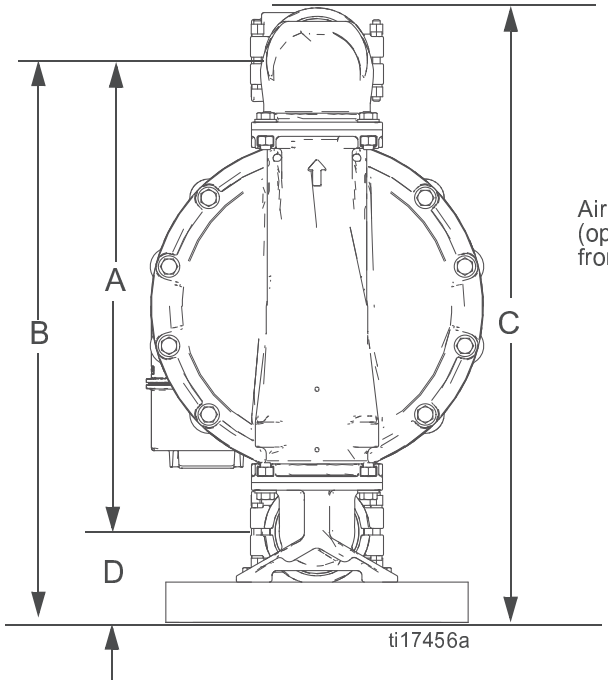

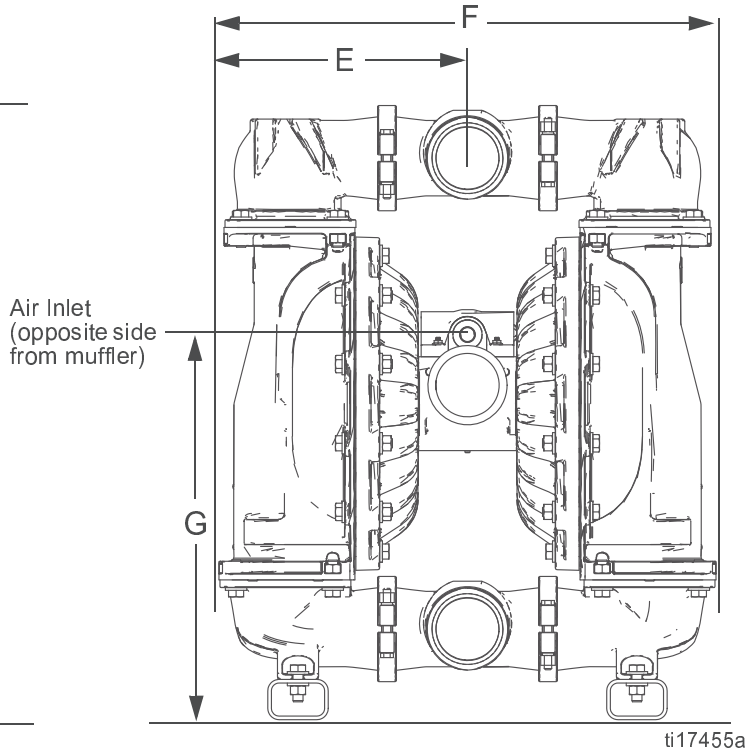

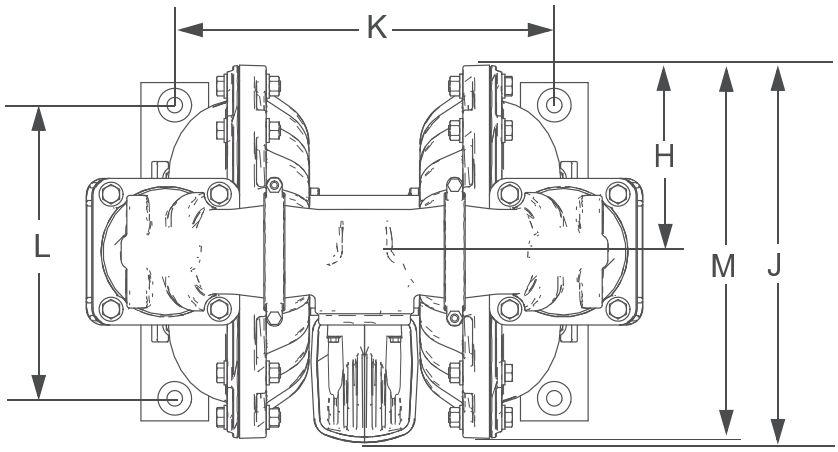

A	23.38 in. (59.4 cm)
B	27.88 in. (70.8 cm)
C	30.5 in. (77.5 cm)
D	4.5 in. (11.4 cm)
E	12.34 in. (31.3 cm)
F	24.68 in. (62.7 cm)

G	19.38 in. (49.2 cm)
H	8.25 in. (21.0 cm)
J	16.91 in. (42.9 cm)
K	16.83 in. (42.7 cm)
L	13.0 in. (33.0 cm)
M	16.5 in. (41.9 cm)

Stainless Steel Pump Dimensions (flange ports)

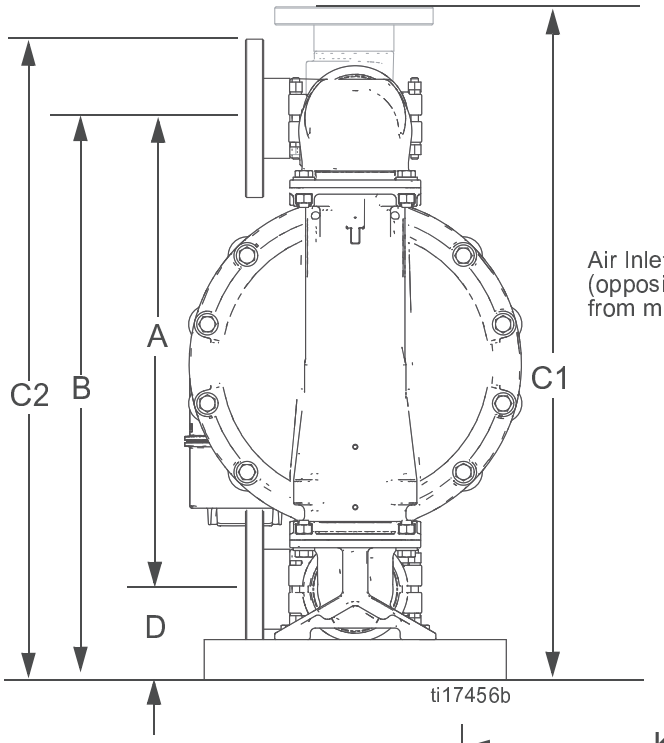

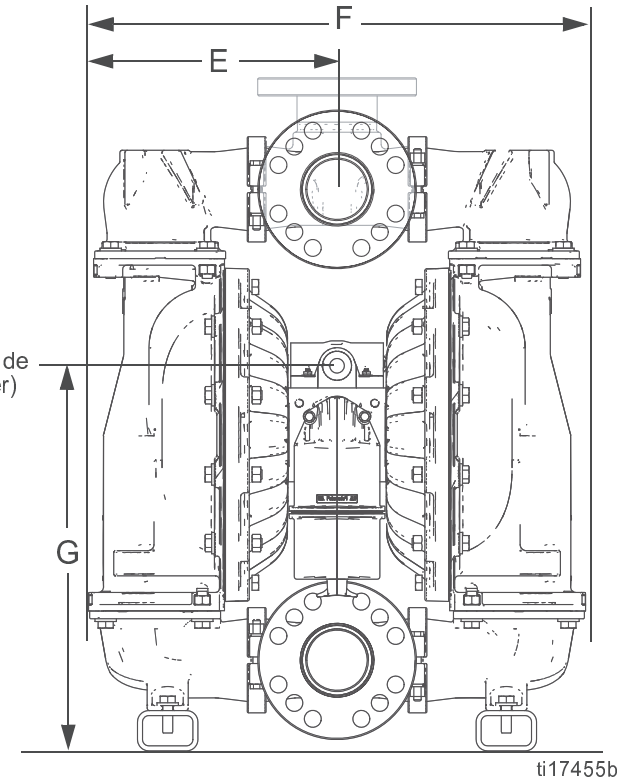

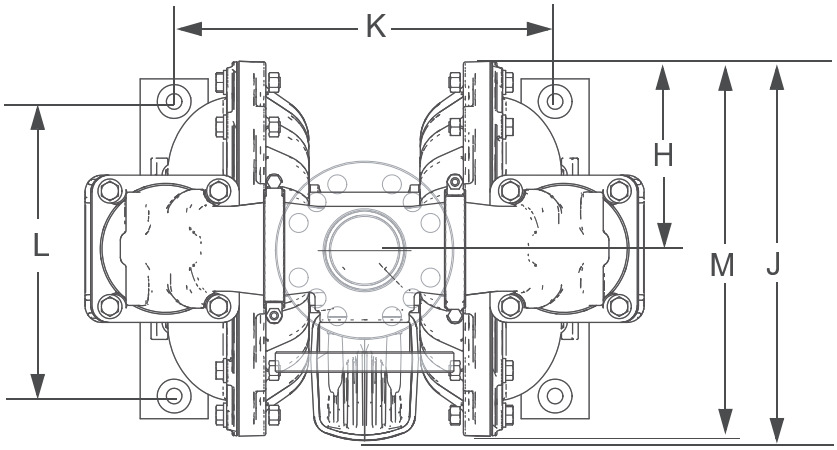

A	23.38 in. (59.4 cm)
B	27.88 in. (70.8 cm)
C1	33.3 in. (84.6 cm)
C2	31.8 in. (80.7 cm)
D	4.5 in. (11.4 cm)
E	12.34 in. (31.3 cm)
F	24.68 in. (62.7 cm)

G	19.38 in. (49.2 cm)
H	8.25 in. (21.0 cm)
J	16.91 in. (42.9 cm)
K	16.83 in. (42.7 cm)
L	13.0 in. (33.0 cm)
M	16.5 in. (41.9 cm)

Performance Charts

Test Conditions: Pump tested in water with inlet submerged

Operating Air Pressure

A
125 psi (0.83 MPa, 8.3 bar)

B
100 psi (0.7 MPa, 7.0 bar)

C
70 psi (0.48 MPa, 4.8 bar)

D
40 psi (0.28 MPa, 2.8 bar)

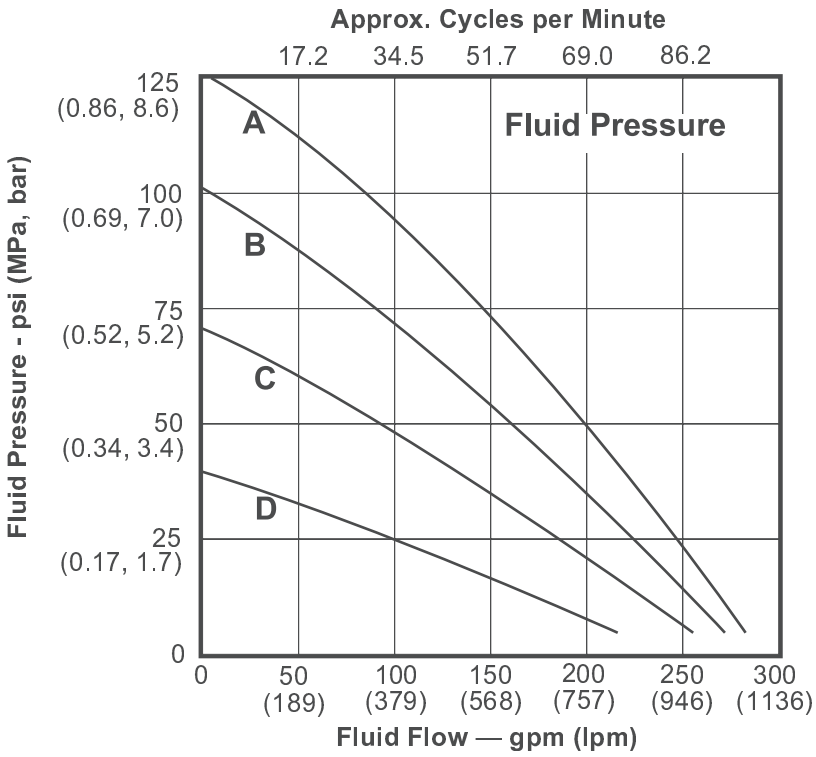

How to Read the Charts

1. Locate fluid flow rate along bottom of chart.
2. Follow vertical line up to intersection with selected operating air pressure curve.
3. Follow left to scale to read **fluid outlet pressure** (top chart) or **air consumption** (bottom chart).

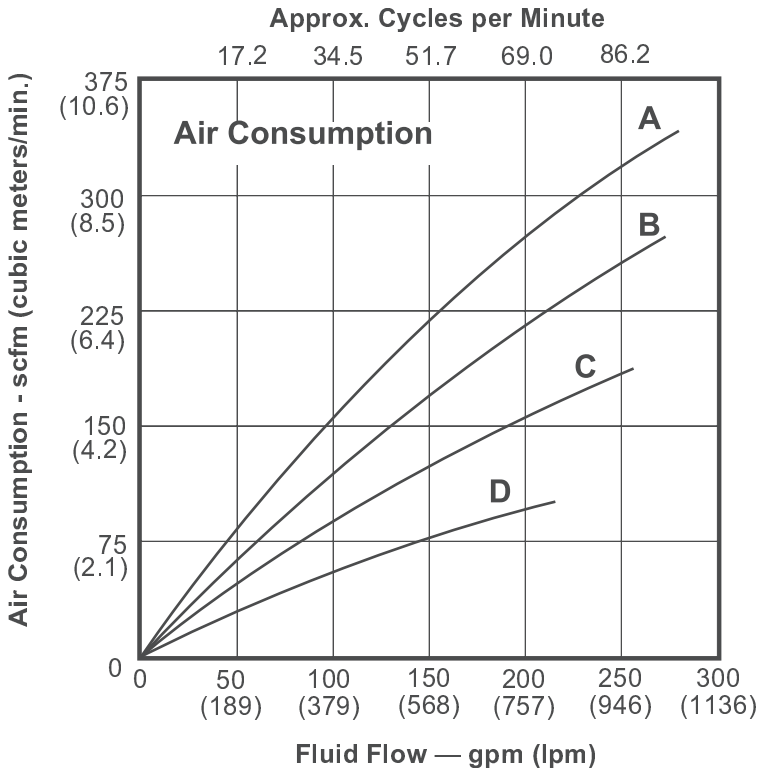

Technical Data

Husky 3300		
	US	**Metric**
Maximum fluid working pressure		
Aluminum or Stainless Steel with Aluminum Center Section	125 psi	0.86 MPa, 8.6 bar
Polypropylene or Stainless Steel with Polypropylene Center Section	100 psi	0.7 MPa, 7 bar
Air pressure operating range**		
Aluminum or Stainless Steel with Aluminum Center Section	20-125 psi	0.14-0.86 MPa, 1.4-8.6 bar
Polypropylene or Stainless Steel with Polypropylene Center Section	20-100 psi	0.14-0.7 MPa, 1.4-7 bar
Air consumption		
All pumps	90 scfm at 70 psi, 100 gpm	2.5 m^3/min at 4.8 bar, 379 lpm
Maximum air consumption*		
Aluminum or Stainless Steel with Aluminum Center Section	335 scfm	9.5 m^3/min
Polypropylene or Stainless Steel with Polypropylene Center Section	275 scfm	7.8 m^3/min
Maximum free-flow delivery*		
Standard diaphragms	300 gpm at 125 psi	1135 lpm at 8.6 bar
Standard diaphragms	280 gpm at 100 psi	1059 lpm at 7 bar
Overmolded diaphragms	270 gpm at 125 psi	1022 lpm at 8.6 bar
Overmolded diaphragms	260 gpm at 100 psi	984 lpm at 7 bar
Maximum Pump Speed*		
Standard diaphragms	103 cpm at 125 psi	103 cpm at 8.6 bar
Standard diaphragms	97 cpm at 100 psi	97 cpm at 7 bar
Overmolded diaphragms	135 cpm at 125 psi	135 cpm at 8.6 bar
Overmolded diaphragms	130 cpm at 100 psi	130 cpm at 7 bar
Maximum suction lift (varies widely based on ball/seat selection and wear, operating speed, material properties, and other variables)*		
Dry	16 ft.	4.9 meters
Wet	31 ft.	9.4 meters
Recommended cycle rate for continuous duty	35 - 50 cpm	
Recommended cycle rate for circulation systems	20 cpm	
Maximum size pumpable solids	1/2 in.	13 mm
Fluid flow per cycle**		
Standard diaphragms	2.9 gal	11.0 l
Overmolded diaphragms	2.0 gal	7.6 l
Ambient Temperature		
Minimum ambient air temperature for operation and storage. **NOTE**: Exposure to extreme low temperatures may result in damage to plastic parts.	32° F	0° C

Husky 3300		
	US	**Metric**
Noise (dBa)* **		
Sound Power	99.1 at 50 psi and 50 cpm, 106.1 at 125 psi and full flow	99.1 at 3.4 bar and 50 cpm 106.1 at 8.6 bar and full flow
Sound Pressure	91.5 at 50 psi and 50 cpm 98.2 at 125 psi and full flow	91.5 at 3.4 bar and 50 cpm 98.2 at 8.6 bar and full flow
Inlet/Outlet Sizes		
Fluid inlet - Polypropylene	3 in. ANSI/DIN flange	
Fluid inlet - Aluminum	3 in.-8 npt or 3 in.-11 bspt with 3 in. ANSI/DIN flange	
Fluid inlet - Stainless Steel	3 in.-8 npt or 3 in.-11 bspt	
Air Inlet - all pumps	3/4 in. npt(f)	
Wetted parts		
All pumps	Materials chosen for seat, ball, and diaphragm options, **plus** the pump's material of construction - aluminum, polypropylene, or stainless steel. Aluminum pumps also have carbon-coated steel.	
Non-wetted external parts		
Polypropylene	stainless steel, polypropylene	
Aluminum	aluminum, coated carbon steel	
Stainless Steel	stainless steel, polypropylene or aluminum (as used in center section)	
Weight		
Polypropylene	200 lb	91 kg
Aluminum	150 lb	68 kg
Stainless Steel		
npt or bspt inlet/outlet	255 lb	116 kg
flanged inlet/outlet	277 lb	126 kg
Notes		
* *Maximum values with water as media at ambient temperature. Water level is approximately 3 feet above pump inlet.*		
** *Startup pressures and displacement per cycle may vary based on suction condition, discharge head, air pressure, and fluid type.*		
*** *Sound power measured per ISO-9614-2. Sound pressure was tested 3.28 ft (1 m) from equipment.*		
Santoprene® is a registered trademark of the Monsanto Co.		

Fluid Temperature Range

NOTICE

Temperature limits are based on mechanical stress only. Certain chemicals will further limit the fluid temperature range. Stay within the temperature range of the most-restricted wetted component. Operating at a fluid temperature that is too high or too low for the components of your pump may cause equipment damage.

Diaphragm/Ball/Seat Material	Fluid Temperature Range			
	Aluminum Pumps		Polypropylene Pumps	
Acetal	10° to 180°F	-12° to 82°C	32° to 150°F	0° to 66°C
Buna-N	10° to 180°F	-12° to 82°C	32° to 150°F	0° to 66°C
FKM Fluoroelastomer*	-40° to 275°F	-40° to 135°C	32° to 150°F	0° to 66°C
Geolast®	-40° to 150°F	-40° to 66°C	32° to 150°F	0° to 66°C
Polychloroprene overmolded diaphragm or Polychloroprene check balls	0° to 180°F	-18° to 82°C	32° to 150°F	0° to 66°C
Polypropylene	32° to 150°F	0° to 66°C	32° to 150°F	0° to 66°C
PTFE overmolded diaphragm	40° to 180°F	4° to 82°C	40° to 150°F	4° to 66°C
PTFE check balls	40° to 220°F	4° to 104°C	40° to 150°F	4° to 66°C
Santoprene® or two-piece PTFE/Santoprene diaphragm	-40° to 180°F	-40° to 82°C	32° to 150°F	0° to 66°C
TPE	-20° to 150°F	-29° to 66°C	32° to 150°F	0° to 66°C

* *The maximum temperature listed is based on the ATEX standard for T4 temperature classification. If you are operating in a non-explosive environment, FKM fluoroelastomer's maximum fluid temperature in aluminum pumps is 320°F (160°C).*

Graco Standard Husky Pump Warranty

Graco warrants all equipment referenced in this document which is manufactured by Graco and bearing its name to be free from defects in material and workmanship on the date of sale to the original purchaser for use. With the exception of any special, extended, or limited warranty published by Graco, Graco will, for a period of five years from the date of sale, repair or replace any part of the equipment determined by Graco to be defective. This warranty applies only when the equipment is installed, operated and maintained in accordance with Graco's written recommendations.

This warranty does not cover, and Graco shall not be liable for general wear and tear, or any malfunction, damage or wear caused by faulty installation, misapplication, abrasion, corrosion, inadequate or improper maintenance, negligence, accident, tampering, or substitution of non-Graco component parts. Nor shall Graco be liable for malfunction, damage or wear caused by the incompatibility of Graco equipment with structures, accessories, equipment or materials not supplied by Graco, or the improper design, manufacture, installation, operation or maintenance of structures, accessories, equipment or materials not supplied by Graco.

This warranty is conditioned upon the prepaid return of the equipment claimed to be defective to an authorized Graco distributor for verification of the claimed defect. If the claimed defect is verified, Graco will repair or replace free of charge any defective parts. The equipment will be returned to the original purchaser transportation prepaid. If inspection of the equipment does not disclose any defect in material or workmanship, repairs will be made at a reasonable charge, which charges may include the costs of parts, labor, and transportation.

THIS WARRANTY IS EXCLUSIVE, AND IS IN LIEU OF ANY OTHER WARRANTIES, EXPRESS OR IMPLIED, INCLUDING BUT NOT LIMITED TO WARRANTY OF MERCHANTABILITY OR WARRANTY OF FITNESS FOR A PARTICULAR PURPOSE.

Graco's sole obligation and buyer's sole remedy for any breach of warranty shall be as set forth above. The buyer agrees that no other remedy (including, but not limited to, incidental or consequential damages for lost profits, lost sales, injury to person or property, or any other incidental or consequential loss) shall be available. Any action for breach of warranty must be brought within six (6) years of the date of sale.

GRACO MAKES NO WARRANTY, AND DISCLAIMS ALL IMPLIED WARRANTIES OF MERCHANTABILITY AND FITNESS FOR A PARTICULAR PURPOSE, IN CONNECTION WITH ACCESSORIES, EQUIPMENT, MATERIALS OR COMPONENTS SOLD BUT NOT MANUFACTURED BY GRACO. These items sold, but not manufactured by Graco (such as electric motors, switches, hose, etc.), are subject to the warranty, if any, of their manufacturer. Graco will provide purchaser with reasonable assistance in making any claim for breach of these warranties.

In no event will Graco be liable for indirect, incidental, special or consequential damages resulting from Graco supplying equipment hereunder, or the furnishing, performance, or use of any products or other goods sold hereto, whether due to a breach of contract, breach of warranty, the negligence of Graco, or otherwise.

FOR GRACO CANADA CUSTOMERS
The Parties acknowledge that they have required that the present document, as well as all documents, notices and legal proceedings entered into, given or instituted pursuant hereto or relating directly or indirectly hereto, be drawn up in English. Les parties reconnaissent avoir convenu que la rédaction du présente document sera en Anglais, ainsi que tous documents, avis et procédures judiciaires exécutés, donnés ou intentés, à la suite de ou en rapport, directement ou indirectement, avec les procédures concernées.

Graco Information

For the latest information about Graco products, visit www.graco.com.

For patent information, see www.graco.com/patents.

TO PLACE AN ORDER, contact your Graco distributor or call to identify the nearest distributor.
Phone: 612-623-6921 **or Toll Free:** 1-800-328-0211 **Fax:** 612-378-3505

All written and visual data contained in this document reflects the latest product information available at the time of publication. Graco reserves the right to make changes at any time without notice.

Original instructions. This manual contains English. MM 3A0410

Graco Headquarters: Minneapolis
International Offices: Belgium, China, Japan, Korea

GRACO INC. AND SUBSIDIARIES • P.O. BOX 1441 • MINNEAPOLIS MN 55440-1441 • USA

Copyright 2012, Graco Inc. All Graco manufacturing locations are registered to ISO 9001.
www.graco.com
Rev. H, September 2016