Operation

Husky® 1050 Air-Operated Diaphragm Pump

312877T
EN

1-inch pump with modular air valve for fluid transfer applications.
For professional use only.

See page 4 for model information, including approvals.

125 psi (0.86 MPa, 8.6 bar) Maximum Fluid Working Pressure
125 psi (0.86 MPa, 8.6 bar) Maximum Air Input Pressure

Important Safety Instructions
Read all warnings and instructions in this manual.
Save these instructions.

1050P Polypropylene
1050C Conductive Polypropylene
1050F PVDF

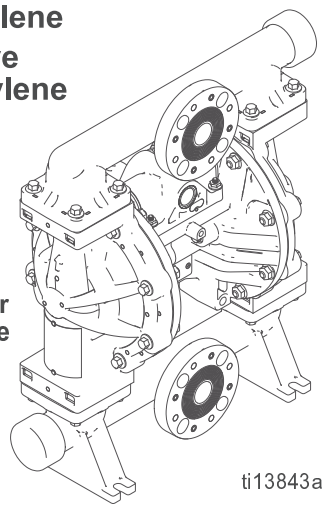

1050A Aluminum

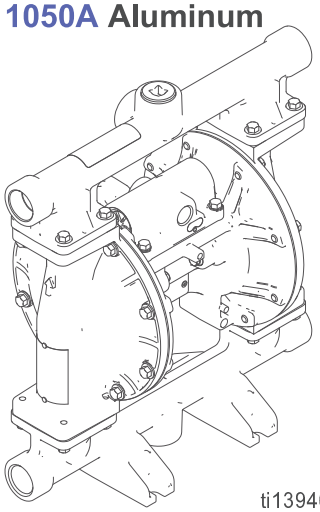

1050S Stainless Steel
1050H Hastelloy

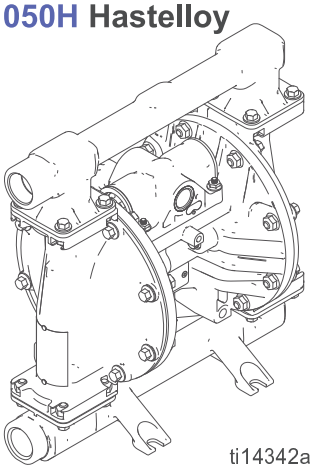

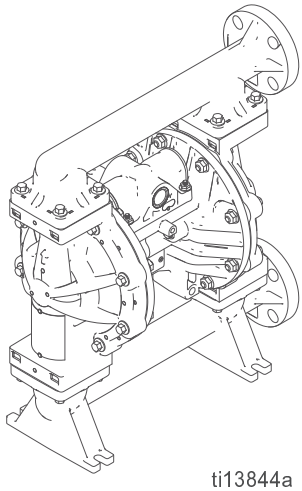

PROVEN QUALITY. LEADING TECHNOLOGY.

Contents

Related Manuals 2
To Find Your Nearest Distributor 3
To Specify the Configuration of a New Pump 3
To Order Replacement Parts 3
Distributor Note 3
Configuration Number Matrix 4
ATEX Certifications 5
Warnings 5
Installation 7
Tighten Fasteners Before Setup 7
Tips to Reduce Cavitation 8
Mounting 9
Grounding 9
Air Line 10
Reed Switch 10
Air Exhaust Ventilation 11
Fluid Supply Line 12
Fluid Outlet Line 12
Fluid Inlet and Outlet Ports 14
Fluid Pressure Relief Valve 15
Operation 16
Pressure Relief Procedure 16
Flush the Pump Before First Use 16
Tighten Fasteners Before Setup 16
Starting and Adjusting the Pump 16
DataTrak Operation 17
Pump Shutdown 17
Maintenance 17
Maintenance Schedule 17
Lubrication 17
Tighten Threaded Connections 17
Flushing and Storage 17
Torque Instructions 18
Dimensions and Mounting 19
Aluminum (1050A) 19
Polypropylene (1050P), Conductive Polypropylene (1050C) and PVDF (1050F) 20
Hastelloy (1050H) and Stainless Steel (1050S) 21
Performance Charts 23
Technical Data 24

Related Manuals

Manual	Description
313435	Husky 1050 Air-Operated Diaphragm Pump, Repair/Parts
313597	Husky 1050A UL-Listed Diaphragm Pump, Operation
313598	Husky 1050A CSA-Certified Diaphragm Pump, Operation
313840	DataTrak, Instructions/Parts
406824	Pulse Count Kits, Instructions

To Find Your Nearest Distributor

1. Visit www.graco.com.
2. Click on **Where to Buy** and use the **Distributor Locator**.

To Specify the Configuration of a New Pump

Please call your distributor.

OR

1. Use the **Online Husky Selector Tool** at wwwd.graco.com/training/husky/index.html.
2. If the link does not work, you will find the selector tool on the **Process Equipment** page at **www.graco.com**.

To Order Replacement Parts

Please call your distributor.

Distributor Note

1. To find part numbers for new pumps or kits, use the **Online Husky Selector Tool**.
2. To find part numbers for replacement parts:
   a. Use the configuration number from the ID plate on the pump. If you only have the Graco 6-digit part number, use the selector tool to find the corresponding configuration number.
   b. Use the Configuration Number Matrix on the next page to understand which parts are described by each digit.
   c. **Use the Repair/Parts Manual.** Refer to the main Parts illustration and to the Parts/Kits Quick Reference. Follow the page references on these two pages for further ordering information, as needed.
3. Please call Graco Customer Service to order.

Configuration Number Matrix

Check the identification plate (ID) for the Configuration Number of your pump. Use the following matrix to define the components of your pump.

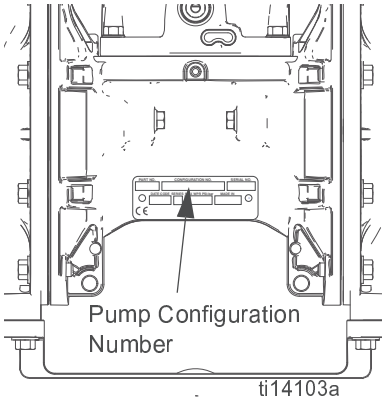

Sample Configuration Number: 1050A-PA01AA1SSBNBNPT

1050	A	P	A01A	A1	SS	BN	BN	PT
Pump Size	Wetted Section Material	Drive Identifier	Center Section and Air Valve	Fluid Covers and Manifolds	Seats	Balls	Diaphragms	Manifold O-Rings

Pump Size	Wetted Section Material		Drive Identifier
1050	A★	Aluminum	P Pneumatic
1050	C★	Conductive Polypropylene	
1050	F	PVDF	
1050	H‡	Hastelloy	
1050	P	Polypropylene	
1050	S‡	Stainless Steel	

Center Section and Air Valve Material		Air Valve/Monitoring
Aluminum	A01A	Standard
	A01B	Pulse Count✖
	A01C	DataTrak✖
	A01D	Remote
	A01E	Optional FKM Seals
Conductive Polypropylene	C01A	Standard
	C01B	Pulse Count✖
	C01C	DataTrak✖
	C01D	Remote
Polypropylene	P01A	Standard
	P01B	Pulse Count✖
	P01C	DataTrak✖
	P01D	Remote

Fluid Covers and Manifolds	
A1	Aluminum, standard ports, inch
A2	Aluminum, standard ports, metric
C1	Conductive polypropylene, center flange
C2	Conductive polypropylene, end flange
F1	PVDF, center flange
F2	PVDF, end flange
H1	Hastelloy, standard ports, inch
H2	Hastelloy, standard ports, metric
P1	Polypropylene, center flange
P2	Polypropylene, end flange
S1	Stainless steel, standard ports, inch
S2	Stainless steel, standard ports, metric
S5-1	Stainless steel, center flange, horizontal outlet port
S5-2	Stainless steel, center flange, vertical outlet port

★, ‡, or ✖: See **ATEX Certifications**, on page 5.

Check Valve Seats	
AC	Acetal
AL	Aluminum
BN	Buna-N
FK	FKM Fluoroelastomer
GE	Geolast®
PP	Polypropylene
PV	PVDF
SP	Santoprene®
SS	316 Stainless Steel
TP	TPE

Check Valve Balls	
AC	Acetal
BN	Buna-N
CR	Polychloroprene Standard
CW	Polychloroprene Weighted
FK	FKM Fluoroelastomer
GE	Geolast
PT	PTFE
SP	Santoprene
SS	316 Stainless Steel
TP	TPE

Diaphragm	
BN	Buna-N
CO	Polychloroprene Overmolded
FK	FKM Fluoroelastomer
GE	Geolast
PO	PTFE/EPDM Overmolded
PT	PTFE/EPDM Two-Piece
SP	Santoprene
TP	TPE

Manifold O-Rings	
—	Models with Buna-N, FKM Fluoroelastomer or TPE seats do not use o-rings.
PT	PTFE

ATEX Certifications

★ *All 1050A (Aluminum) and 1050C (Conductive Polypropylene) pumps are certified:*

II 2 GD c IIC T4

‡ *1050S (Stainless Steel) and 1050H (Hastelloy) pumps with aluminum or conductive polypropylene centers are certified:*

II 2 GD c IIC T4

✖ *DataTrak and Pulse Count are certified:*

Intertek
9902471
Class I, Div. 1, Group D T3A

0359

II 1 G
Ex ia IIA T3 Ga
ITS13ATEX27862X

Warnings

The following warnings are for the setup, use, grounding, maintenance, and repair of this equipment. The exclamation point symbol alerts you to a general warning and the hazard symbol refers to procedure-specific risk. When these symbols appear in the body of this manual, refer back to these warnings. Additional, product-specific warnings may be found throughout the body of this manual where applicable.

WARNING

FIRE AND EXPLOSION HAZARD

Flammable fumes, such as solvent and paint fumes, in **work area** can ignite or explode. To help prevent fire and explosion:

- Use equipment only in well ventilated area.
- Eliminate all ignition sources; such as pilot lights, cigarettes, portable electric lamps, and plastic drop cloths (potential static arc).
- Keep work area free of debris, including solvent, rags and gasoline.
- Do not plug or unplug power cords, or turn power or light switches on or off when flammable fumes are present.
- Ground all equipment in the work area. See **Grounding** instructions.
- Use only grounded hoses.
- Hold gun firmly to side of grounded pail when triggering into pail.
- If there is static sparking or you feel a shock, **stop operation immediately.** Do not use equipment until you identify and correct the problem.
- Keep a working fire extinguisher in the work area.

Static charge may build up on plastic parts during cleaning and could discharge and ignite flammable materials and gases. To help prevent fire and explosion:

- Clean plastic parts in a well ventilated area.
- Do not clean with a dry cloth.
- Do not operate electrostatic guns in equipment work area.

WARNING

SPECIAL CONDITIONS FOR SAFE USE

Equipment must comply with the following conditions to avoid a hazardous condition which can cause fire or explosion.

- All label and marking material must be cleaned with a damp cloth (or equivalent).
- The electronic monitoring system is required to be grounded. See **Grounding** instructions.

EQUIPMENT MISUSE HAZARD

Misuse can cause death or serious injury.

- Do not operate the unit when fatigued or under the influence of drugs or alcohol.
- Do not exceed the maximum working pressure or temperature rating of the lowest rated system component. See **Technical Data** in all equipment manuals.
- Use fluids and solvents that are compatible with equipment wetted parts. See **Technical Data** in all equipment manuals. Read fluid and solvent manufacturer's warnings. For complete information about your material, request MSDS from distributor or retailer.
- Do not leave the work area while equipment is energized or under pressure. Turn off all equipment and follow the **Pressure Relief Procedure** in this manual when equipment is not in use.
- Check equipment daily. Repair or replace worn or damaged parts immediately with genuine manufacturer's replacement parts only.
- Do not alter or modify equipment.
- Use equipment only for its intended purpose. Call your distributor for information.
- Route hoses and cables away from traffic areas, sharp edges, moving parts, and hot surfaces.
- Do not kink or over bend hoses or use hoses to pull equipment.
- Keep children and animals away from work area.
- Comply with all applicable safety regulations.

PRESSURIZED EQUIPMENT HAZARD

Fluid from the gun/dispense valve, leaks, or ruptured components can splash in the eyes or on skin and cause serious injury.

- Follow **Pressure Relief Procedure** in this manual, when you stop spraying and before cleaning, checking, or servicing equipment.
- Tighten all fluid connections before operating the equipment.
- Check hoses, tubes, and couplings daily. Replace worn or damaged parts immediately.

THERMAL EXPANSION HAZARD

Fluids subjected to heat in confined spaces, including hoses, can create a rapid rise in pressure due to the thermal expansion. Over-pressurization can result in equipment rupture and serious injury.

- Open a valve to relieve the fluid expansion during heating.
- Replace hoses proactively at regular intervals based on your operating conditions.

WARNING	
	PRESSURIZED ALUMINUM PARTS HAZARD Use of fluids that are incompatible with aluminum in pressurized equipment can cause serious chemical reaction and equipment rupture. Failure to follow this warning can result in death, serious injury, or property damage. • Do not use 1,1,1-trichloroethane, methylene chloride, other halogenated hydrocarbon solvents or fluids containing such solvents. • Many other fluids may contain chemicals that can react with aluminum. Contact your material supplier for compatibility.
	PLASTIC PARTS CLEANING SOLVENT HAZARD Use only compatible water-based solvents to clean plastic structural or pressure-containing parts. Many solvents can degrade plastic parts and cause them to fail, which could cause serious injury or property damage. See **Technical Data** in this and all other equipment instruction manuals. Read fluid and solvent manufacturer's warnings.
	TOXIC FLUID OR FUMES HAZARD Toxic fluids or fumes can cause serious injury or death if splashed in the eyes or on skin, inhaled, or swallowed. • Read MSDS's to know the specific hazards of the fluids you are using. • Route exhaust away from work area. If diaphragm ruptures, fluid may be exhausted with air. • Store hazardous fluid in approved containers, and dispose of it according to applicable guidelines.
	BURN HAZARD Equipment surfaces and fluid that's heated can become very hot during operation. To avoid severe burns: • Do not touch hot fluid or equipment.
	PERSONAL PROTECTIVE EQUIPMENT You must wear appropriate protective equipment when operating, servicing, or when in the operating area of the equipment to help protect you from serious injury, including eye injury, inhalation of toxic fumes, burns, and hearing loss. This equipment includes but is not limited to: • Clothing and respirator as recommended by the fluid and solvent manufacturer • Protective eyewear, gloves, and hearing protection

Installation

The Typical Installation shown in FIG. 4 is only a guide for selecting and installing system components. Contact your Graco distributor for assistance in planning a system to suit your needs.

Tighten Fasteners Before Setup

Before using the pump for the first time, check and retorque all external fasteners. Follow **Torque Instructions**, page 18.

Tips to Reduce Cavitation

Cavitation in a diaphragm pump is the formation and collapse of bubbles in the pumped liquid. Frequent or excessive cavitation can cause serious damage, including pitting and early wear of fluid chambers, balls, and seats. It may result in reduced efficiency of the pump. Cavitation damage and reduced efficiency both result in increased operating costs.

Cavitation depends on the vapor pressure of the pumped liquid, the system suction pressure, and the velocity pressure. It can be reduced by changing any of these factors.

1. Reduce vapor pressure: Decrease the temperature of the pumped liquid.
2. Increase suction pressure:
   a. Lower the installed position of the pump relative to the liquid level in the supply.
   b. Reduce the friction length of the suction piping. Remember that fittings add friction length to the piping. Reduce the number of fittings to reduce the friction length.
   c. Increase the size of the suction piping.
   d. Increase the Net Positive Suction Head (NPSH). See .**Performance Charts**, page 23.
   NOTE: Be sure the inlet fluid pressure does not exceed 25% of the outlet working pressure.
3. Reduce liquid velocity: Slow the cyclic rate of the pump.

Pumped liquid viscosity is also very important but normally is controlled by factors that are process dependent and cannot be changed to reduce cavitation. Viscous liquids are more difficult to pump and more prone to cavitation.

Graco recommends taking all of the above factors into account in system design. To maintain pump efficiency, supply only enough power to the pump to achieve the required flow.

Graco distributors can supply site specific suggestions to improve pump performance and reduce operating costs.

Mounting

- The pump exhaust air may contain contaminants. Ventilate to a remote area. See **Air Exhaust Ventilation** on page **11.**
- Never move or lift a pump under pressure. If dropped, the fluid section may rupture. Always follow the **Pressure Relief Procedure** on page **16** before moving or lifting the pump.

1. For wall mounting, order Graco Kit 24C637.
2. Be sure the mounting surface can support the weight of the pump, hoses, and accessories, as well as the stress caused during operation.
3. For all mountings, be sure the pump is bolted directly to the mounting surface.
4. For ease of operation and service, mount the pump so air valve, air inlet, fluid inlet and fluid outlet ports are easily accessible.
5. Rubber Foot Mounting Kit 236452 is available to reduce noise and vibration during operation.

Grounding

The equipment must be grounded to reduce the risk of static sparking. Static sparking can cause fumes to ignite or explode. Grounding provides an escape wire for the electric current.

Pump: See FIG. 1. Loosen the grounding screw (GS). Insert one end of a 12 ga. minimum ground wire (R) behind the grounding screw and tighten the screw securely. Connect the clamp end of the ground wire to a true earth ground. A ground wire and clamp, Part 238909, is available from Graco.

Polypropylene and PVDF: Only aluminum, conductive polypropylene, hastelloy, and stainless steel pumps have a ground screw. Standard polypropylene and PVDF pumps are **not** conductive. **Never** use a non-conductive polypropylene or PVDF pump with non-conductive flammable fluids. Follow your local fire codes. When pumping conductive flammable fluids, **always** ground the entire fluid system as described.

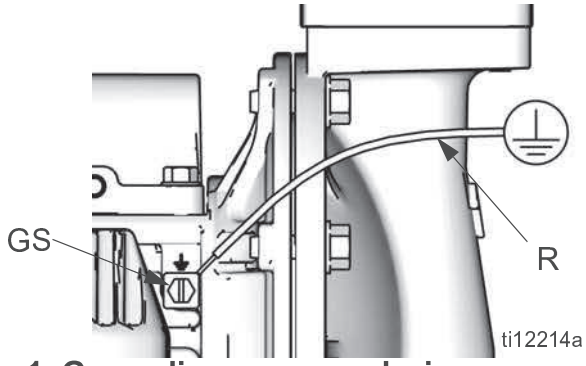

FIG. 1. Grounding screw and wire

Air and fluid hoses: Use only grounded hoses with a maximum of 500 ft (150 m) combined hose length to ensure grounding continuity.

Air compressor: Follow manufacturer's recommendations.

Fluid supply container: Follow local code.

Solvent pails used when flushing: Follow local code. Use only conductive metal pails, placed on a grounded surface. Do not place the pail on a nonconductive surface, such as paper or cardboard, which interrupts grounding continuity.

Check your system electrical continuity after the initial installation, and then set up a regular schedule for checking continuity to be sure proper grounding is maintained.

Air Line

See FIG. 4, page 13.

1. Install an air regulator (C) and gauge to control the fluid pressure. The fluid stall pressure will be the same as the setting of the air regulator.
2. Locate a bleed-type master air valve (B) close to the pump and use it to relieve trapped air. Be sure the valve is easily accessible from the pump and located downstream from the regulator.

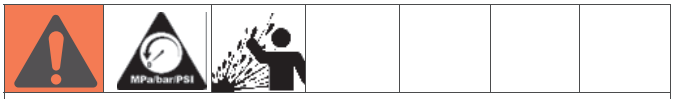

Trapped air can cause the pump to cycle unexpectedly, which could result in serious injury from splashing.

3. Locate another master air valve (E) upstream from all air line accessories and use it to isolate them during cleaning and repair.
4. An air line filter (F) removes harmful dirt and moisture from the compressed air supply.
5. Install a grounded, flexible air hose (A) between the accessories and the 1/2 npt(f) pump air inlet (D). Use a minimum 3/8 in. (10 mm) ID air hose.

Installation of Remote Pilot Air Lines

NOTICE

Pilot supply pressure should not exceed 25-50% of main air supply pressure. If pilot supply pressure is too high, the pump could leak air or exhaust excessive air at stall.

1. Connect an air supply line to the pump (A, FIG. 3, page 11).
2. Insert 5/32 OD tubing into the push-to-connect fitting on each pilot valve (113).
3. Connect remaining ends of tubes to external air signal, such as Graco's CycleFlo™ (PN 195264) or CycleFlo II (PN 195265) controllers.

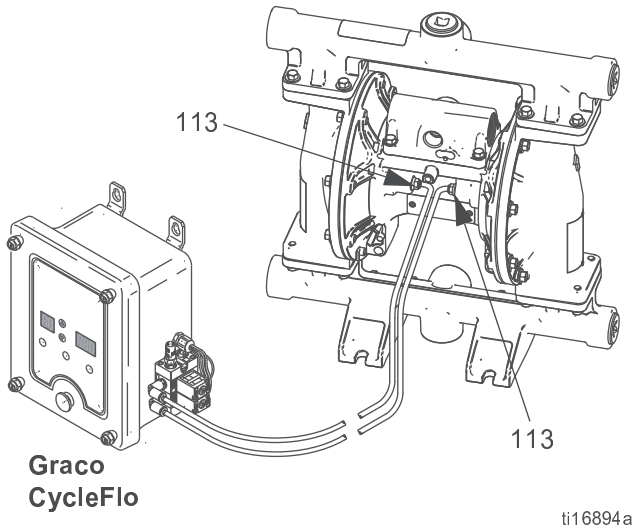

FIG. 2. Connect Remote Air Control

Reed Switch

Pulse Count models are intended for use with customer-supplied fluid management or inventory tracking systems. Attach an M12, 5-pin female cable to connect the reed switch to your data monitoring system. *See Manual 406824.*

Air Exhaust Ventilation

The air exhaust port is 3/4 npt(f). Do not restrict the air exhaust port. Excessive exhaust restriction can cause erratic pump operation.

To provide a remote exhaust:

1. Remove the muffler (T) from the pump air exhaust port.
2. Install a grounded air exhaust hose (U) and connect the muffler (T) to the other end of the hose. The minimum size for the air exhaust hose is 3/4 in. (19 mm) ID. If a hose longer than 15 ft (4.57 m) is required, use a larger diameter hose. Avoid sharp bends or kinks in the hose.
3. Place a container at the end of the air exhaust line to catch fluid in case a diaphragm ruptures. If the diaphragm ruptures, the fluid being pumped will exhaust with the air.

Key:
A Air supply line
B Bleed-type master air valve
C Air filter/regulator assembly
D Air inlet
E Master air valve (for accessories)
T Muffler
U Grounded air exhaust hose
V Container for remote air exhaust

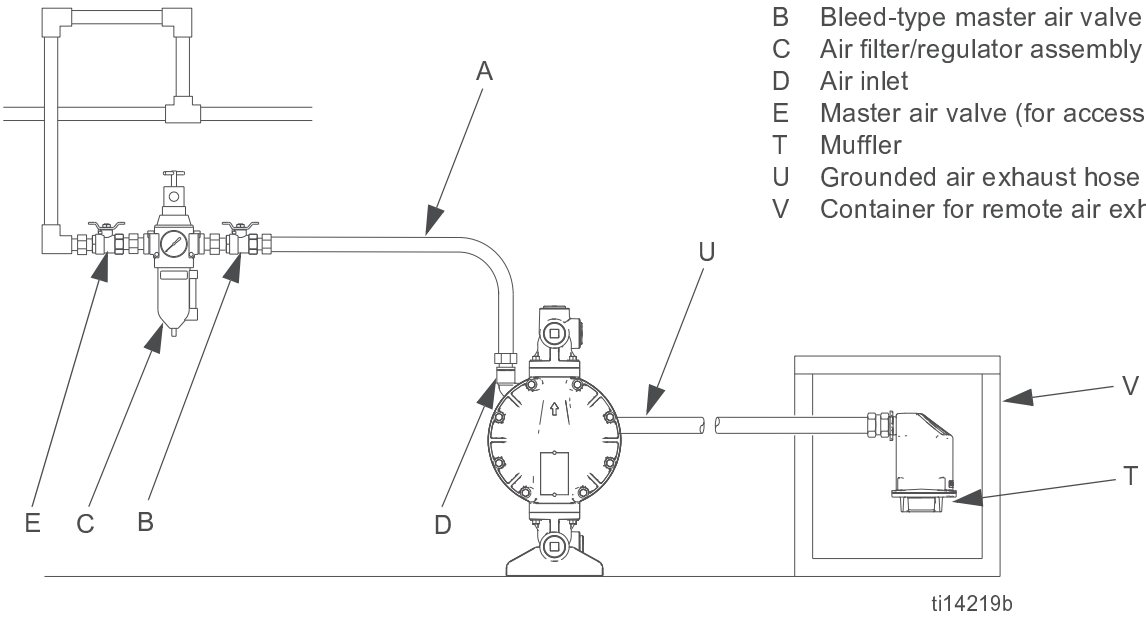

FIG. 3. Vent exhaust air

Fluid Supply Line

See FIG. 4, page 13.

1. Use grounded, flexible fluid supply lines (G). See **Grounding**, page 9.
2. If the inlet fluid pressure to the pump is more than 25% of the outlet working pressure, the ball check valves will not close fast enough, resulting in inefficient pump operation. Excessive inlet fluid pressure also will shorten diaphragm life. Approximately 3 - 5 psi (0.02- 0.03 MPa, 0.21-0.34 bar) should be adequate for most materials.
3. For maximum suction lift (wet and dry), see **Technical Data**, page 24. For best results, always install the pump as close as possible to the material source.

Fluid Outlet Line

See FIG. 4, page13.

1. Use grounded, flexible fluid hoses (L). See **Grounding**, page 9.
2. Install a fluid drain valve (J) near the fluid outlet.
3. Install a shutoff valve (K) in the fluid outlet line.

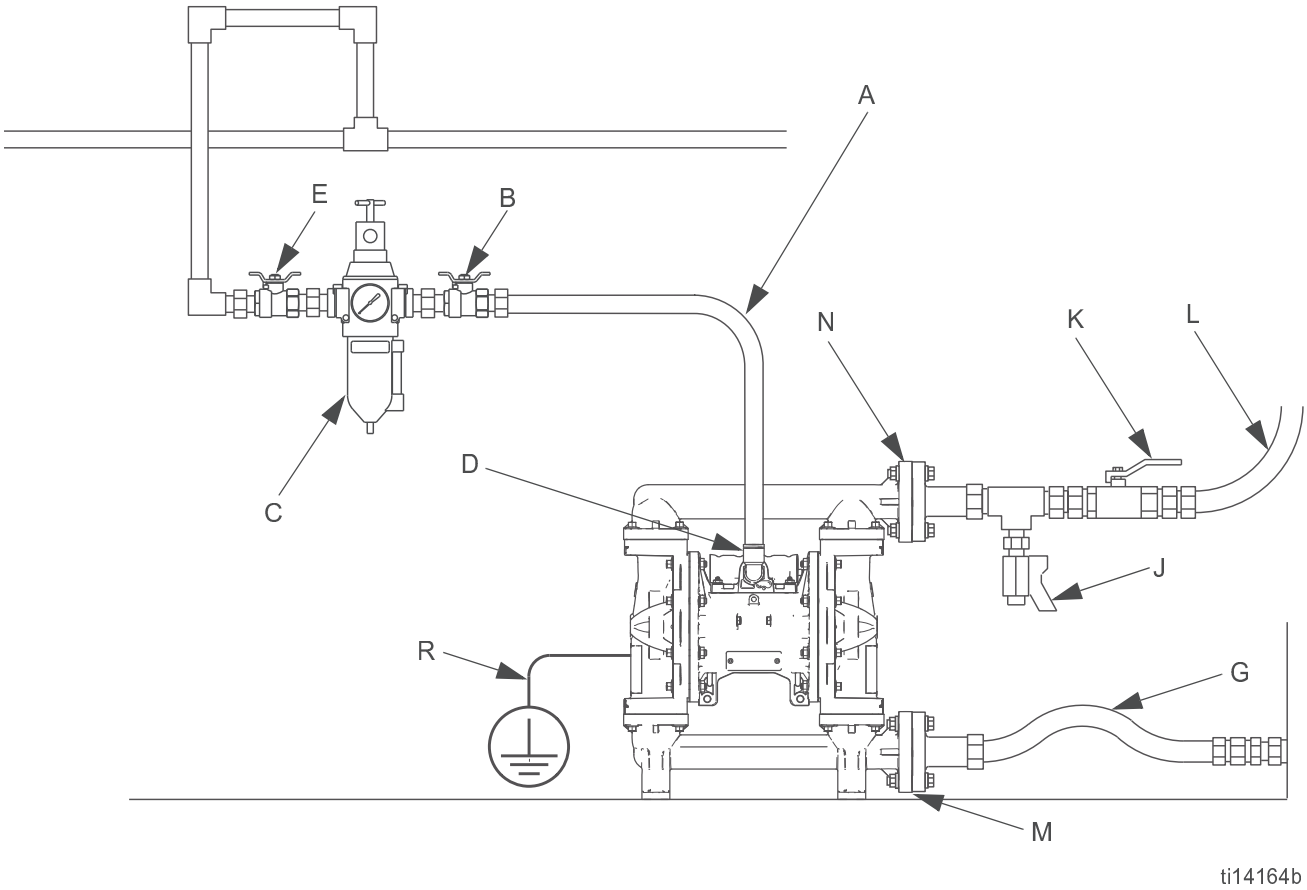

FIG. 4. Typical floor-mount installation (polypropylene, 1050P, pump shown)

Key for FIG. 4:

A Air supply line
B Bleed-type master air valve (required for pump)
C Air filter/regulator assembly
D Air inlet
E Master air valve (for accessories)
G Grounded, flexible fluid supply line
J Fluid drain valve (required)
K Fluid shutoff valve
L Grounded, flexible fluid outlet line
M Fluid inlet (Aluminum, not pictured, four ports; Plastic, FIG. 4, center or end flanges available; Hastelloy and stainless steel, not pictured, one port)
N Fluid outlet (Aluminum, not pictured, four ports; Plastic, FIG. 4, center or end flanges available; Hastelloy and stainless steel, not pictured, one port)
R Ground wire (required for aluminum, conductive polypropylene, hastelloy, and stainless steel pumps; see page 9 for installation instructions)

Fluid Inlet and Outlet Ports

NOTE: Remove and reverse the manifold(s) to change the orientation of inlet or outlet port(s). Follow **Torque Instructions** on page 18.

Aluminum (1050A)

The fluid inlet and outlet manifolds each have four 1 in. npt(f) or bspt threaded ports. Close off the unused ports, using the supplied plugs.

Plastic (1050P, 1050C, 1050F)

The fluid inlet and outlet manifolds each have a 1 in. raised face ANSI/DIN flange (FIG. 4, M, N) in either a center or end location. Connect 1 in. standard flanged plastic pipe to the pump. See FIG. 5.

Graco standard pipe flange kits are available in polypropylene (239005), stainless steel (239008), and PVDF (239009). These kits include:

- the pipe flange
- a PTFE gasket
- four 1/2 in. bolts, spring lock washers, flat washers and nuts.

Be sure to lubricate the threads of the bolts and torque to 10-15 ft-lb (14-20 N•m). Follow the bolt tightening sequence and **do not over-torque.**

Hastelloy (1050H) or Stainless Steel (1050S)

The fluid inlet and outlet manifolds each have one 1 in. npt (f) or bspt threaded port. The models with stainless steel flanged center ports have ANSI/DIN flanges.

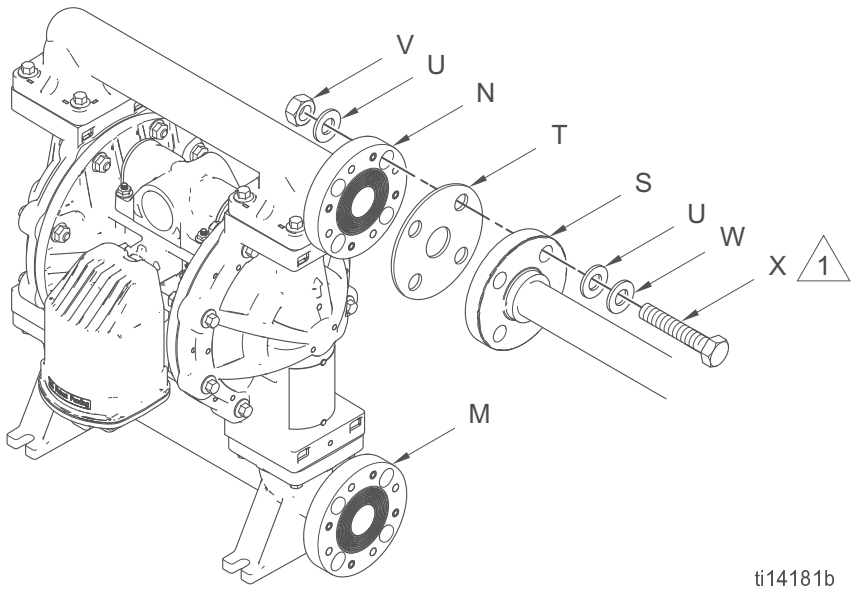

Bolt tightening sequence

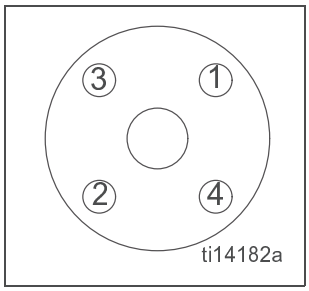

Key:

M	1 in. fluid inlet flange
N	1 in. fluid outlet flange
S	1 in. standard pipe flange
T	PTFE gasket
U	Flat washer
V	Nut
W	Lock washer
X	Bolt

1 Torque to 10-15 ft-lb (14-20 N•m). Do not over-torque.

FIG. 5. Flange connections (plastic pumps only, 1050P, 1050C, and 1050F models)

Fluid Pressure Relief Valve

Some systems may require installation of a pressure relief valve at the pump outlet to prevent overpressurization and rupture of the pump or hose.

Thermal expansion of fluid in the outlet line can cause overpressurization. Thermal expansion can occur when using long fluid lines exposed to sunlight or ambient heat, or when pumping from a cool to a warm area (for example, from an underground tank).

Overpressurization also can occur if the Husky pump is used to feed fluid to a piston pump, and the intake valve of the piston pump does not close, causing fluid to back up in the outlet line.

FIG. 6 shows Fluid Pressure Relief Kit 238428 for aluminum pumps. Use Fluid Pressure Relief Kit 112119, not shown, for plastic pumps.

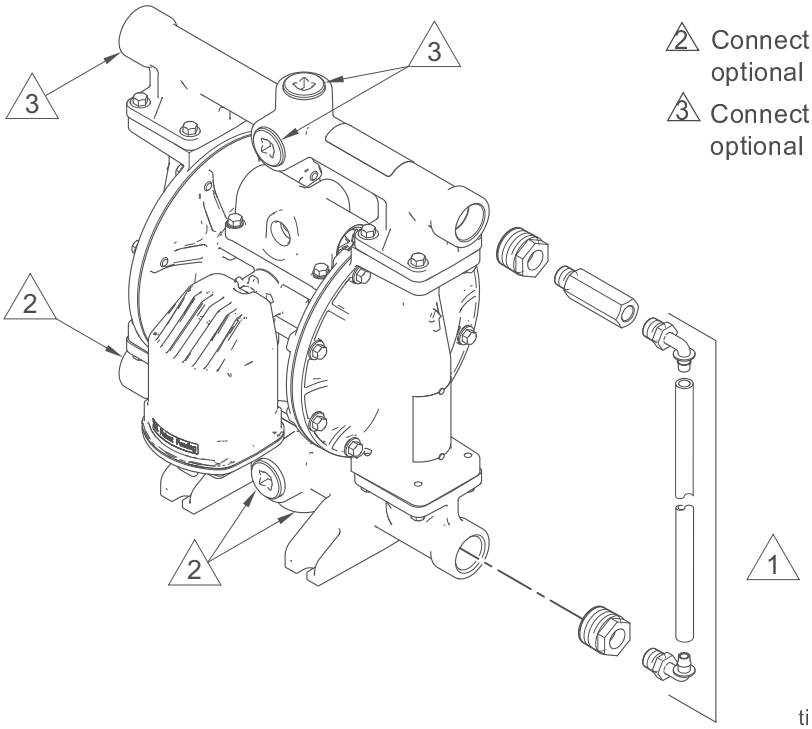

1. Apply thread sealant on threaded connections and install kit between fluid inlet and outlet manifolds.
2. Connect fluid inlet line in one of the optional ports.
3. Connect fluid outlet line in one of the optional ports.

FIG. 6. Fluid pressure relief kit (Aluminum pumps only, 1050A models)

Operation

Pressure Relief Procedure

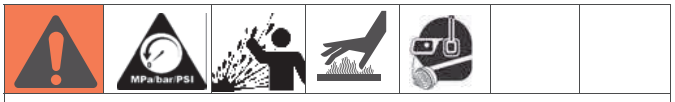

Trapped air can cause the pump to cycle unexpectedly, which could result in serious injury from splashing.

1. Shut off the air supply to the pump.
2. Open the dispensing valve, if used.
3. Open the fluid drain valve to relieve fluid pressure. Have a container ready to catch the drainage.

Flush the Pump Before First Use

The pump was tested in water. If water could contaminate the fluid you are pumping, flush the pump thoroughly with a compatible solvent. See **Flushing and Storage**, page 17.

Tighten Fasteners Before Setup

Before using the pump for the first time, check and retorque all external fasteners. Follow **Torque Instructions**, page 18. After the first day of operation, retorque the fasteners.

Starting and Adjusting the Pump

1. Be sure the pump is properly grounded. Refer to **Grounding** on page 9.
2. Check fittings to be sure they are tight. Use a compatible liquid thread sealant on male threads. Tighten fluid inlet and outlet fittings securely.
3. Place the suction tube (if used) in fluid to be pumped.

NOTE: If fluid inlet pressure to the pump is more than 25% of outlet working pressure, the ball check valves will not close fast enough, resulting in inefficient pump operation.

4. Place the end of the fluid hose into an appropriate container.
5. Close the fluid drain valve.
6. Back out the air regulator knob, and open all bleed-type master air valves.
7. If the fluid hose has a dispensing device, hold it open.
8. *Pumps with runaway protection:* Enable the prime/flush function by pushing the prime/flush button on the DataTrak.
9. Slowly increase air pressure with the air regulator just until the pump starts to cycle. Allow the pump to cycle slowly until all air is pushed out of the lines and the pump is primed.

NOTE: Use lowest possible air pressure to prime, just enough to cycle the pump. If the pump does not prime as expected, turn air pressure **DOWN.**

NOTICE
When replacing Husky 1040s: The Husky 1050 operates more efficiently than did the 1040. **Reduce** air inlet pressure by approximately **20 percent** to maintain an equivalent fluid output.

10. If you are flushing, run the pump long enough to thoroughly clean the pump and hoses.

11. Close the dispensing valve, if used.

12. Close the bleed-type master air valve.

13. *Pumps with runaway protection:* Disable the prime/flush function by pushing the prime/flush button on the DataTrak.

DataTrak Operation

See DataTrak manual 313840 for all DataTrak information and parts, including detailed operation instructions.

Pump Shutdown

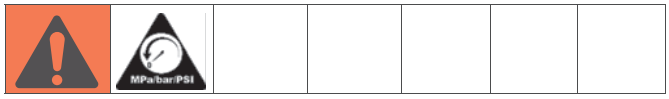

At the end of the work shift and before you check, adjust, clean or repair the system, follow **Pressure Relief Procedure**, page 16.

Maintenance

Maintenance Schedule

Establish a preventive maintenance schedule, based on the pump's service history. Scheduled maintenance is especially important to prevent spills or leakage due to diaphragm failure.

Lubrication

The pump is lubricated at the factory. It is designed to require no further lubrication for the life of the pump. There is no need to add an inline lubricator under normal operating conditions.

Tighten Threaded Connections

Before each use, check all hoses for wear or damage and replace as necessary. Check to be sure all threaded connections are tight and leak-free. Check fasteners. Tighten or retorque as necessary. Although pump use varies, a general guideline is to retorque fasteners every two months. See **Torque Instructions**, page 18.

Flushing and Storage

- Flush before fluid can dry in the equipment, at the end of the day, before storing, and before repairing equipment.
- Flush at the lowest pressure possible. Check connectors for leaks and tighten as necessary.
- Flush with a fluid that is compatible with the fluid being dispensed and the equipment wetted parts.

Flush the pump often enough to prevent the fluid you are pumping from drying or freezing in the pump and damaging it. Use a compatible solvent.

Always flush the pump and relieve the pressure before storing it for any length of time.

Torque Instructions

NOTE: Fluid cover and manifold fasteners have a thread-locking adhesive patch applied to the threads. If this patch is excessively worn, the fasteners may loosen during operation. Replace screws with new ones or apply medium-strength (blue) Loctite or equivalent to the threads.

If fluid cover or manifold fasteners have been loosened, it is important to torque them using the following procedure to improve sealing.

NOTE: Always completely torque fluid covers before torquing manifolds.

Start all fluid cover screws a few turns. Then turn down each screw just until head contacts cover. Then turn each screw by 1/2 turn or less working in a crisscross pattern to specified torque. Repeat for manifolds.

Fluid cover and manifold fasteners:
90 in-lb (10.2 N•m)

Retorque the air valve fasteners (V) in a crisscross pattern to specified torque.

Plastic center sections: 55 in-lb (6.2 N•m)
Metal center sections: 80 in-lb (9.0 N•m)

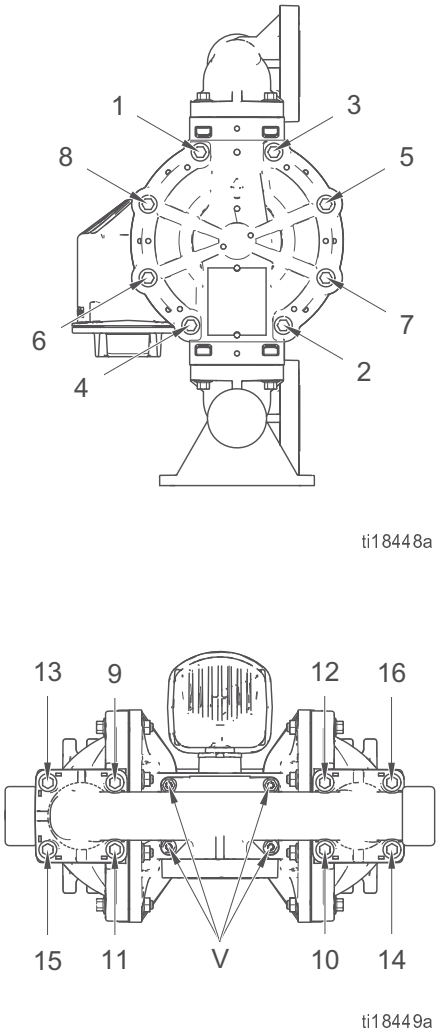

FIG. 7. Torque sequence

Dimensions and Mounting

Aluminum (1050A)

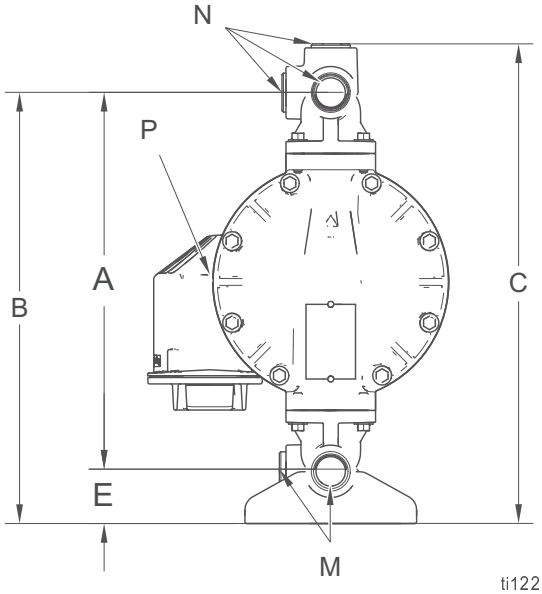

ti12212b

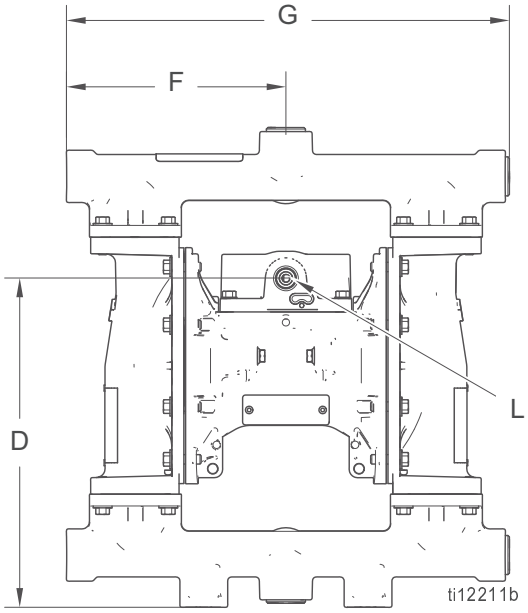

ti12211b

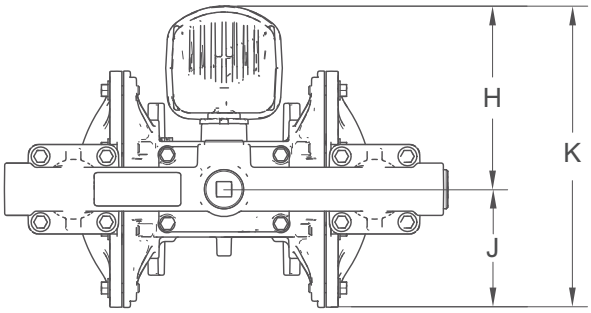

ti12213b

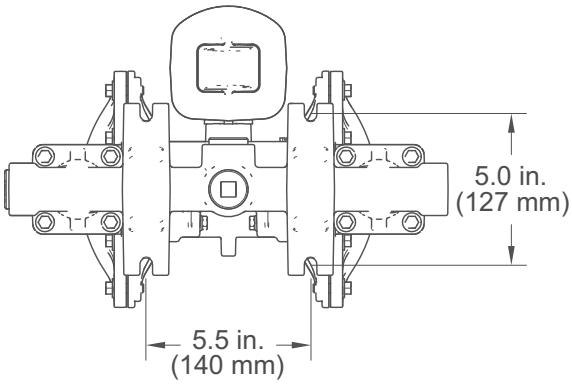

ti14540b

A ..... 12.7 in. (323 mm)
B ..... 14.4 in. (366 mm)
C ..... 15.9 in. (404 mm)
D ..... 10.9 in. (277 mm)
E ..... 1.8 in. (46 mm)
F..... 7.3 in. (185 mm)
G ..... 14.7 in. (373 mm)
H ..... 6.2 in. (158 mm)
J ..... 3.9 in. (99 mm)
K..... 10.2 in. (258 mm)
L ..... 1/2 npt(f) air inlet
M .... 1 in. npt(f) or 1 in. bspt fluid inlet ports (4)
N..... 1 in. npt(f) or 1 in. bspt fluid outlet ports (4)
P ..... 3/4 npt(f) air exhaust port

Polypropylene (1050P), Conductive Polypropylene (1050C) and PVDF (1050F)

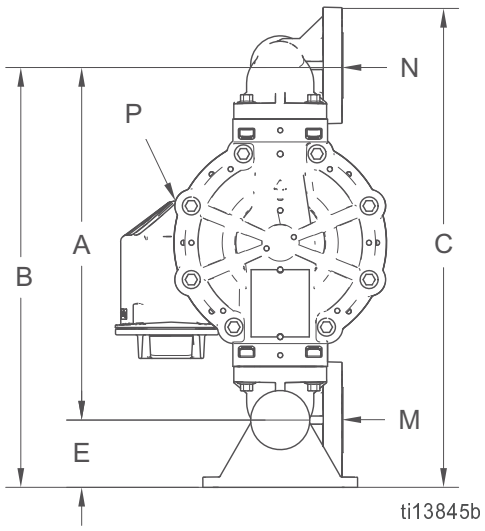

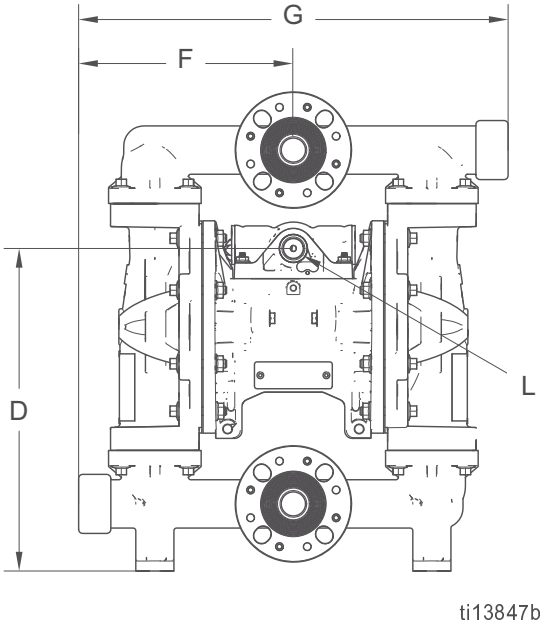

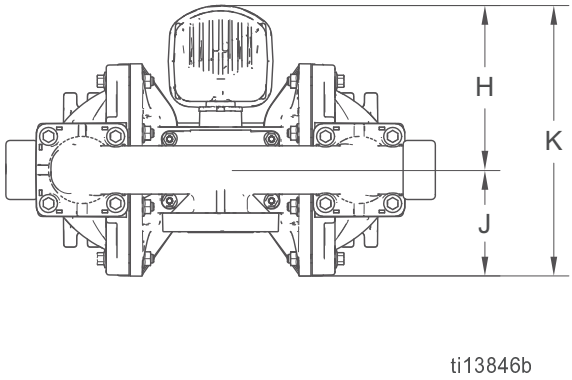

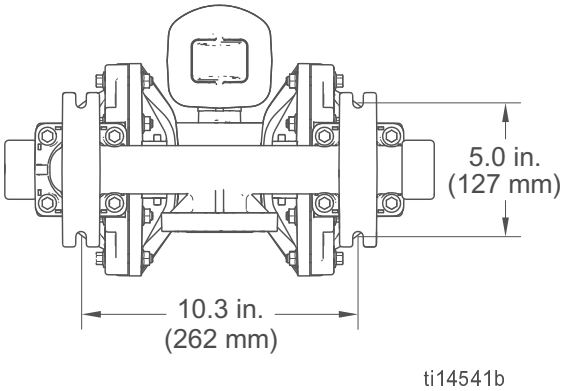

A ..... 13.2 in. (335 mm)
B ..... 15.7 in. (399 mm)
C ..... 17.8 in. (452 mm)
D ..... 12.0 in. (305 mm)
E..... 2.5 in. (63.5 mm)
F..... 8.0 in. (203 mm)
G ..... **Center Flange:** 16.0 in. (406 mm)
End Flange: 15.2 in. (386 mm)
H ..... 6.2 in. (158 mm)
J ..... 3.9 in. (99 mm)
K..... 10.2 in. (258 mm)
L ..... 1/2 npt(f) air inlet
M .... 1 in. ANSI/DIN flange
N..... 1 in. ANSI/DIN flange
P ..... 3/4 npt(f) air exhaust port

NOTE: Listed dimensions are accurate for both center and end flange models, except where noted.

Hastelloy (1050H) and Stainless Steel (1050S)

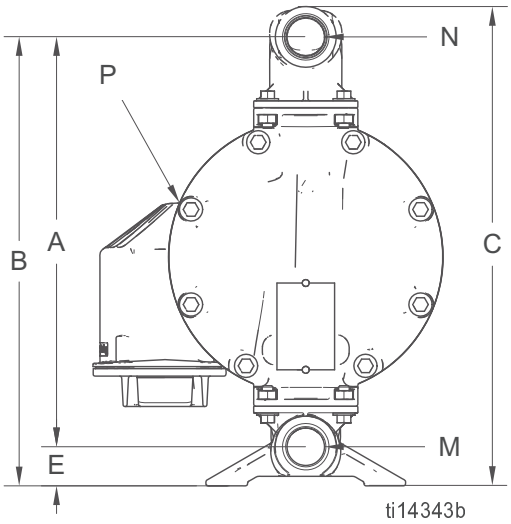

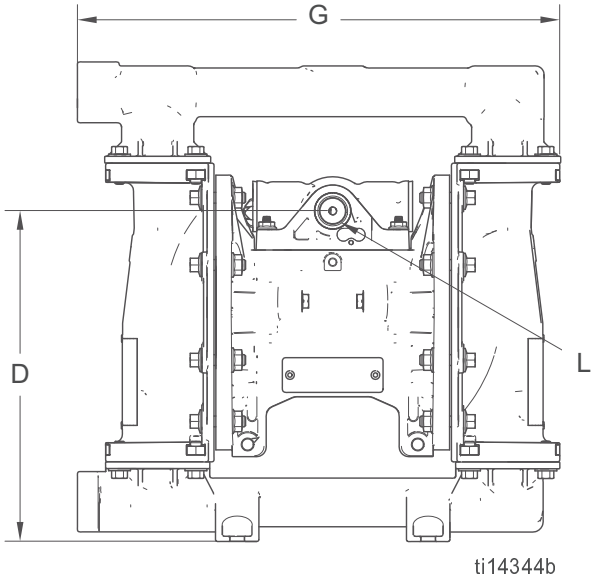

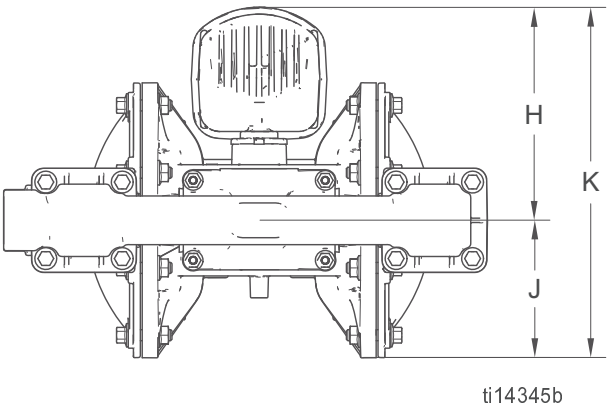

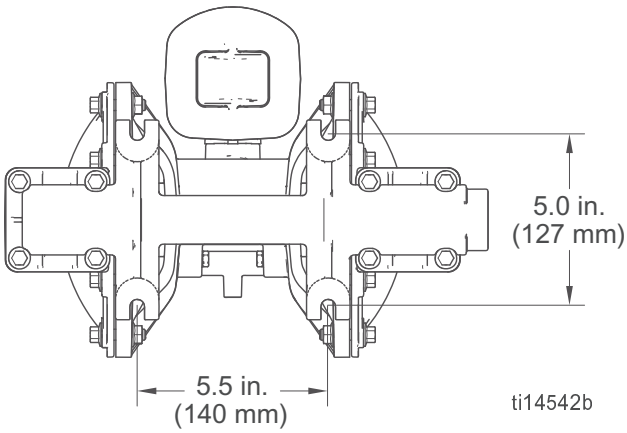

A ..... 11.8 in. (300 mm)
B ..... 12.9 in. (328 mm)
C ..... 13.7 in. (348 mm)
D ..... 9.5 in. (241 mm)
E ..... 1.1 in. (28 mm)
G ..... 13.9 in. (353 mm)
H ..... 6.2 in. (158 mm)
J ..... 4.0 in. (102 mm)
K ..... 10.2 in. (258 mm)

L ..... 1/2 npt(f) air inlet
M .... 1 in. npt(f) or 1 in. bspt fluid inlet ports (4)
N..... 1 in. npt(f) or 1 in. bspt fluid outlet ports (4)
P ..... 3/4 npt(f) air exhaust port

Stainless steel (1050S) with center flange manifold

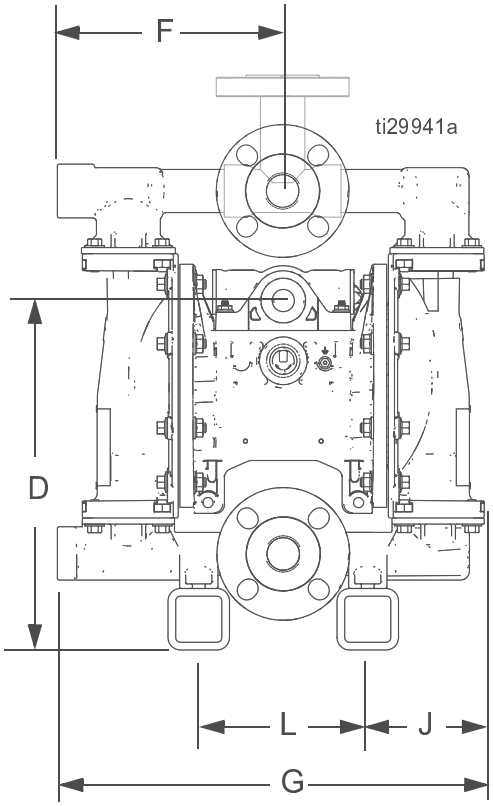

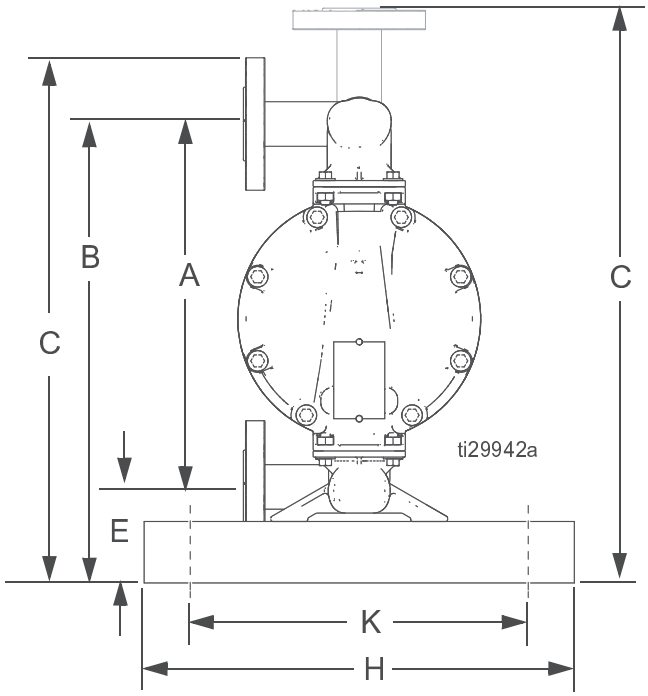

A ..... 11.8 in. (300 mm)
B ..... 14.9 in. (378 mm)
C*.... 17.1/18.7 in. (434/475 mm)
D ..... 11.5 in. (292 mm)
E..... 3.1 in. (79 mm)
F..... 7.35 in. (187 mm)
G ..... 13.9 in. (353 mm)
H ..... 14.0 in. (356 mm)
J ..... 3.8 in. (97 mm)
K ..... 11.0 in. (279 mm)
L..... 5.5 in. (140 mm)

*Dimension C lists values for outlet port in both horizontal and vertical positions.

Performance Charts

Test Conditions: Pump tested in water with inlet submerged.

Operating Air Pressure

A
125 psi (0.83 MPa, 8.3 bar)

B
100 psi (0.7 MPa, 7.0 bar)

C
70 psi (0.48 MPa, 4.8 bar)

D
40 psi (0.28 MPa, 2.8 bar)

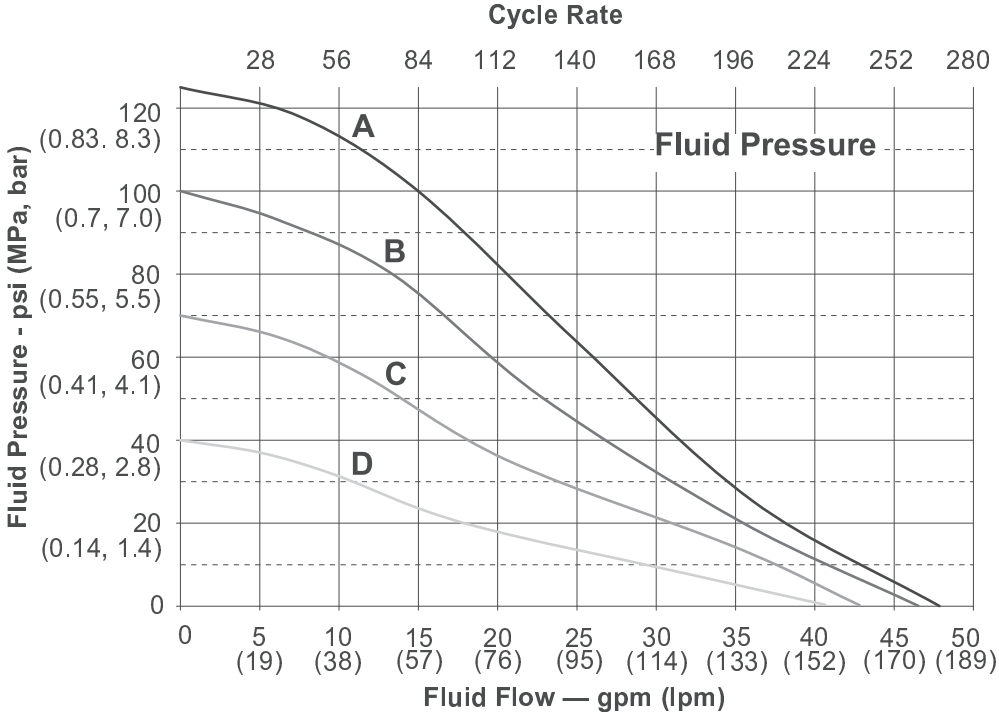

How to Read the Charts

1. Locate fluid flow rate along bottom of chart.
2. Follow vertical line up to intersection with selected operating air pressure curve.
3. Follow left to scale to read **fluid outlet pressure** (top chart) or **air consumption** (bottom chart).

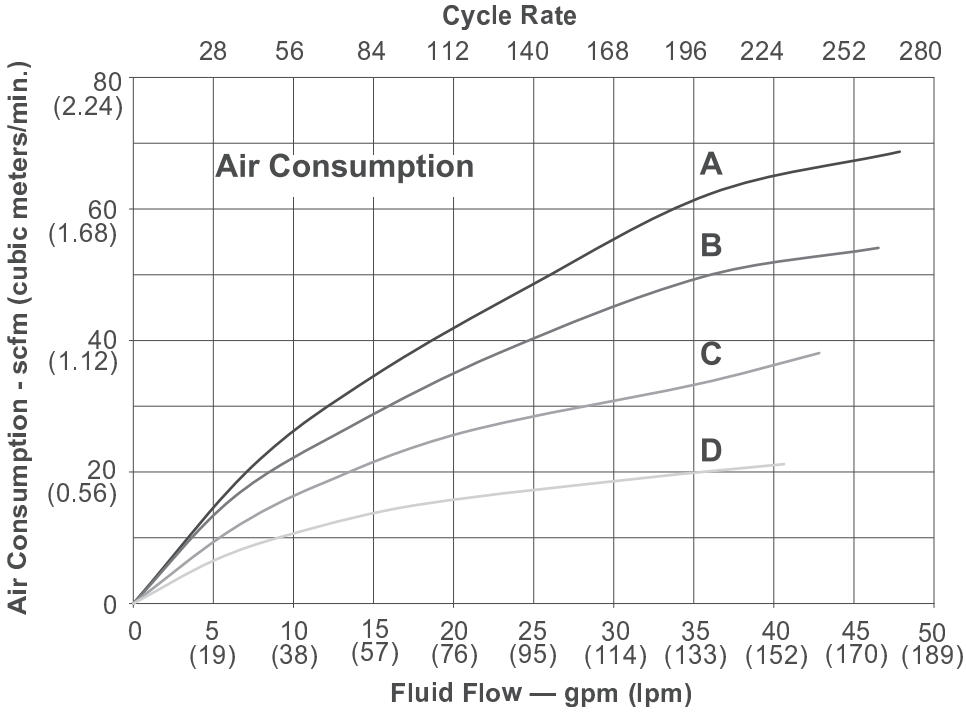

Technical Data

Maximum fluid working pressure	125 psi (0.86 MPa, 8.6 bar)
Air pressure operating range	20-125 psi (0.14-0.86 MPa, 1.4-8.6 bar)
Fluid displacement per cycle	0.17 gal. (0.64 liters)
Air consumption at 70 psi (0.48 MPa, 4.8 bar), 20 gpm (76 lpm)	25 scfm
Maximum values with water as media under submerged inlet conditions at ambient temperature:	
Maximum air consumption	67 scfm
Maximum free-flow delivery	50 gpm (189 lpm)
Maximum pump speed	280 cpm
Maximum suction lift (varies widely based on ball/seat selection and wear, operating speed, material properties, and other variables)	16 ft (4.9 m) dry, 29 ft (8.8 m) wet
Maximum size pumpable solids	1/8 in. (3.2 mm)
Recommended cycle rate for continuous use	93 - 140 cpm
Recommended cycle rate for circulation systems	20 cpm
Sound Power*	
at 70 psi (0.48 MPa, 4.8 bar) and 50 cpm	78 dBa
at 100 psi (0.7 MPa, 7.0 bar) and full flow	90 dBa
Sound Pressure**	
at 70 psi (0.48 MPa, 4.8 bar) and 50 cpm	84 dBa
at 100 psi (0.7 MPa, 7.0 bar) and full flow	96 dBa
Fluid temperature range	see page 25
Air inlet size	1/2 npt(f)
Fluid inlet size	
Aluminum (1050A), Hastelloy (1050H) or Stainless Steel (1050S)	1 in. npt(f) or 1 in. bspt
Conductive Poly (1050C), Polypropylene (1050P), PVDF (1050F) or Stainless Steel (1050S) with flanges	1 in. raised face ANSI/DIN flange
Fluid outlet size	
Aluminum (1050A), Hastelloy (1050H) or Stainless Steel (1050S)	1 in. npt(f) or 1 in. bspt
Conductive Poly (1050C), Polypropylene (1050P), PVDF (1050F) or Stainless Steel (1050S) with flanges	1 in. raised face ANSI/DIN flange
Weight	
Aluminum (1050A)	23 lb. (10.5 kg)
Conductive Polypropylene (1050C) and Polypropylene (1050P)	18 lb. (8.2 kg)
Hastelloy	41 lb. (18.6 kg)
PVDF (1050F)	26 lb (11.8 kg)
Stainless Steel (1050S)	
with conductive polypropylene center	36.3 lb. (16.5 kg)
with polypropylene center	37.3 lb. (16.9 kg)
with aluminum center	41.4 lb. (18.8 kg)
with aluminum center and sst center flange manifolds	60.0 lb. (27.2 kg)
Wetted parts include material(s) chosen for seat, ball, and diaphragm options, **plus** the pump's material of construction	
1050A	Aluminum
1050H	Hastelloy
1050C and 1050P	Polypropylene
1050F	PVDF
1050S	Stainless Steel

Non-wetted external parts

Aluminum (1050A)	aluminum, coated carbon steel
Hastelloy (1050H)	hastelloy, stainless steel, polypropylene or aluminum (if used in center section)
Plastic (1050P, 1050C, and 1050F)	tion)
Stainless Steel (1050S)	stainless steel, polypropylene stainless steel, polypropylene or aluminum (if used in center section)

Reference Information

Maximum Storage Time (varies with conditions)	2 years
Maximum Lifetime (varies with operating conditions and maintenance)	10 years
Power Efficiency Factor (varies based on pump configuration, operating parameters, and material)	1.61 gal. air consumed/1 gal. fluid pumped at 70 psi (1.61 liter air consumed/1 liter fluid pumped at 4.8 bar)

** Sound power measured per ISO-9614-2.*
*** Sound pressure was tested 3.28 ft (1 m) from equipment.*

All trademarks mentioned in this manual are the property of their respective owners.

Fluid Temperature Range

NOTICE

Temperature limits are based on mechanical stress only. Certain chemicals will further limit the fluid temperature range. Stay within the temperature range of the most-restricted wetted component. Operating at a fluid temperature that is too high or too low for the components of your pump may cause equipment damage.

	Fluid Temperature Range					
	Aluminum, Hastelloy, or Stainless Steel Pumps		Polypropylene or Conductive Polypropylene Pumps		PVDF Pumps	
Diaphragm/Ball/Seat Material	**Fahrenheit**	**Celsius**	**Fahrenheit**	**Celsius**	**Fahrenheit**	**Celsius**
Acetal (AC)	10° to 180°F	-12° to 82°C	32° to 150°F	0° to 66°C	10° to 180°F	-12° to 82°C
Buna-N (BN)	10° to 180°F	-12° to 82°C	32° to 150°F	0° to 66°C	10° to 180°F	-12° to 82°C
FKM Fluoroelastomer (FK)*	-40° to 275°F	-40° to 135°C	32° to 150°F	0° to 66°C	10° to 225°F	-12° to 107°C
Geolast® (GE)	-40° to 150°F	-40° to 66°C	32° to 150°F	0° to 66°C	10° to 150°F	-12° to 66°C
Polychloroprene overmolded diaphragm (CO) or Polychloroprene check balls (CR or CW)	0° to 180°F	-18° to 82°C	32° to 150°F	0° to 66°C	10° to 180°F	-12° to 82°C
Polypropylene (PP)	32° to 150°F	0° to 66°C	32° to 150°F	0° to 66°C	32° to 150°F	0° to 66°C
PTFE overmolded diaphragm (PO)	40° to 180°F	4° to 82°C	40° to 150°F	4° to 66°C	40° to 180°F	4.0° to 82°C
PTFE check balls or two-piece PTFE/EPDM diaphragm (PT)	40° to 220°F	4° to 104°C	40° to 150°F	4° to 66°C	40° to 220°F	4° to 104°C
PVDF (PV)	10° to 225°F	-12° to 107°C	32° to 150°F	0° to 66°C	10° to 225°F	-12° to 107°C
Santoprene® (SP)	-40° to 180°F	-40° to 82°C	32° to 150°F	0° to 66°C	10° to 180°F	-12° to 82°C
TPE (TP)	-20° to 150°F	-29° to 66°C	32° to 150°F	0° to 66°C	10° to 150°F	-12° to 66°C

** The maximum temperature listed is based on the ATEX standard for T4 temperature classification. If you are operating in a non-explosive environment, FKM fluoroelastomer's maximum fluid temperature in aluminum or stainless steel pumps is 320°F (160°C).*

Graco Standard Husky Pump Warranty

Graco warrants all equipment referenced in this document which is manufactured by Graco and bearing its name to be free from defects in material and workmanship on the date of sale to the original purchaser for use. With the exception of any special, extended, or limited warranty published by Graco, Graco will, for a period of 12 months from the date of sale, repair or replace any part of the equipment determined by Graco to be defective. This warranty applies only when the equipment is installed, operated and maintained in accordance with Graco's written recommendations.

This warranty does not cover, and Graco shall not be liable for general wear and tear, or any malfunction, damage or wear caused by faulty installation, misapplication, abrasion, corrosion, inadequate or improper maintenance, negligence, accident, tampering, or substitution of non-Graco component parts. Nor shall Graco be liable for malfunction, damage or wear caused by the incompatibility of Graco equipment with structures, accessories, equipment or materials not supplied by Graco, or the improper design, manufacture, installation, operation or maintenance of structures, accessories, equipment or materials not supplied by Graco.

This warranty is conditioned upon the prepaid return of the equipment claimed to be defective to an authorized Graco distributor for verification of the claimed defect. If the claimed defect is verified, Graco will repair or replace free of charge any defective parts. The equipment will be returned to the original purchaser transportation prepaid. If inspection of the equipment does not disclose any defect in material or workmanship, repairs will be made at a reasonable charge, which charges may include the costs of parts, labor, and transportation.

THIS WARRANTY IS EXCLUSIVE, AND IS IN LIEU OF ANY OTHER WARRANTIES, EXPRESS OR IMPLIED, INCLUDING BUT NOT LIMITED TO WARRANTY OF MERCHANTABILITY OR WARRANTY OF FITNESS FOR A PARTICULAR PURPOSE.

Graco's sole obligation and buyer's sole remedy for any breach of warranty shall be as set forth above. The buyer agrees that no other remedy (including, but not limited to, incidental or consequential damages for lost profits, lost sales, injury to person or property, or any other incidental or consequential loss) shall be available. Any action for breach of warranty must be brought within two (2) years of the date of sale.

GRACO MAKES NO WARRANTY, AND DISCLAIMS ALL IMPLIED WARRANTIES OF MERCHANTABILITY AND FITNESS FOR A PARTICULAR PURPOSE, IN CONNECTION WITH ACCESSORIES, EQUIPMENT, MATERIALS OR COMPONENTS SOLD BUT NOT MANUFACTURED BY GRACO. These items sold, but not manufactured by Graco (such as electric motors, switches, hose, etc.), are subject to the warranty, if any, of their manufacturer. Graco will provide purchaser with reasonable assistance in making any claim for breach of these warranties.

In no event will Graco be liable for indirect, incidental, special or consequential damages resulting from Graco supplying equipment hereunder, or the furnishing, performance, or use of any products or other goods sold hereto, whether due to a breach of contract, breach of warranty, the negligence of Graco, or otherwise.

FOR GRACO CANADA CUSTOMERS
The Parties acknowledge that they have required that the present document, as well as all documents, notices and legal proceedings entered into, given or instituted pursuant hereto or relating directly or indirectly hereto, be drawn up in English. Les parties reconnaissent avoir convenu que la rédaction du présente document sera en Anglais, ainsi que tous documents, avis et procédures judiciaires exécutés, donnés ou intentés, à la suite de ou en rapport, directement ou indirectement, avec les procédures concernées.

Graco Information

For the latest information about Graco products, visit www.graco.com.
For patent information, see www.graco.com/patents.

TO PLACE AN ORDER, contact your Graco distributor or call to identify the nearest distributor.
Phone: 612-623-6921 **or Toll Free:** 1-800-328-0211 **Fax:** 612-378-3505

All written and visual data contained in this document reflects the latest product information available at the time of publication. Graco reserves the right to make changes at any time without notice.

Original instructions. This manual contains English. MM 312877

Graco Headquarters: Minneapolis
International Offices: Belgium, China, Japan, Korea

GRACO INC. AND SUBSIDIARIES • P.O. BOX 1441 • MINNEAPOLIS MN 55440-1441 • USA

Copyright 2009, Graco Inc. All Graco manufacturing locations are registered to ISO 9001.
www.graco.com
Revision T, March 2017