DRUM/BARREL PUMPS
BT SERIES

Sealed, High Viscosity

High viscosity sealed design with PTFE screw-type lifting compressors for liquids up to 15,000 cP.

- 316 stainless steel tube construction
- Interchangeable with motors
- Up to 15,000 cP with 3 hp motor

Applications:
Oils, resins, solvents*, adhesives, polymers, gear lube, glycerin

Use the handy online Pump Selector at www.finishthompson.com for help choosing a pump.

CONSTRUCTION SPECIFICATIONS

Pump Model	Construction Materials		Tube Dia.	Discharge	Hose Size	Max. Temp.*		Min. Temp.		Tube Lengths
	Outer Tube	Internals	in (cm)	Size & Type	in (cm)	°F	°C	°F	°C	in (cm)
BTS	316SS	316SS, PTFE	2 (5.1)	1-1/2" Hose Barb	1-1/2 (3.8)	200	93	-20	-29	40 (102)

PERFORMANCE DATA

Maximum Flow**		Maximum Head**		Maximum Specific Gravity	Maximum Viscosity	
Electric gpm (lpm)	Air gpm (lpm)	Electric ft (m)	Air ft (m)		Electric	Air
10 (38)	10 (38)	200 (61)	200 (61)	1.8	15000 cP	15000 cP

*When pumping flammables or combustibles, use explosion proof electric or air drive motors on stainless steel tubes with static protection kit.

**Actual performance can vary by +/- 10%. Actual performance will decrease with increased fluid viscosity and specific gravity.

VISCOSITY DATA

Viscosity (cP)	800	3,000	5,000	7,000	15,000
Max Flow gpm (lpm)	10 (38)	6 (23)	6 (23)	6 (23)	6 (23)
Max Head feet (meter)	80 (24)	80 (24)	125 (38)	175 (53)	200 (61)

Note: Maximum viscosity based on 60 Hz operation.

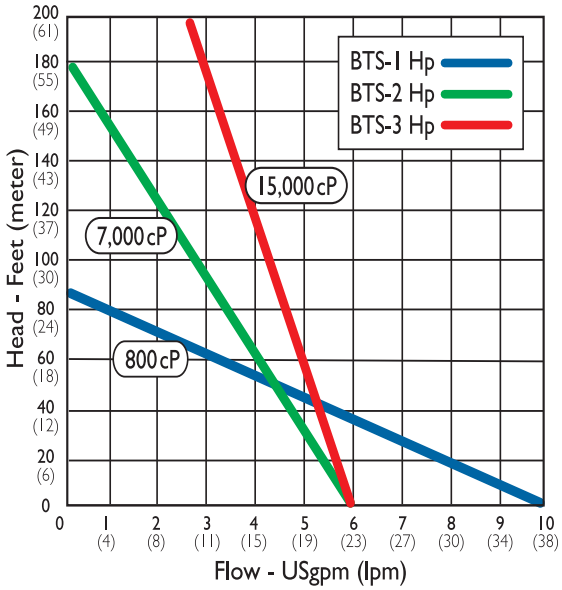

DRUM/BARREL PUMPS

MOTOR DATA

TEFC
(M15, M16, M17, M27, M28, M29, M39, M40)

Ex-Proof TEFC
(M24X, M25X, M26X,M33X, M34X)

Air
(M18, M19, M20)

Model	Description	Certification	Requirements	Output kW	RPM	Maximum Viscosity cP
TEFC (Totally Enclosed Fan Cooled), IP54 Motors						
M15	Continuous duty, 12 ft. (3.5 m) cord.	*	230-460V/3ph/60 Hz	0.75	3,450	800
M16				1.5	1,725	7,000
M17				2.2	1,725	15,000
M27			115-230V/1ph/60 Hz	0.75	3,450	800
M28				1.5	1,725	7,000
M29				2.2	1,725	15,000
M39			220-380-440V/3ph/50-60 Hz	0.75	2,850	1,000
M40				1.5	1,425	8,500
M41				2.2	1,425/1,725	15,000
Explosion Proof Motors						
M33X	Suitable for use in hazardous areas, ideal for flammable liquids. Continuous duty rated.	*	115-230V/1ph/60 Hz	0.75	3,450	800
M34X				1.5	1,725	7,000
M24X			230-460V/3ph/60 Hz	0.75	3,450	800
M25X			230-460V/3ph/50-60 Hz	1.5	1,450/1,725	7,000
M26X				2.2	1,450/1,725	15,000
Air Motors‡†						
M18	Lightweight. Operates from customer-supplied compressed air source. Variable speed. Muffler and control valve supplied.	CE	100 psi @ 40-70 cfm	0.75	300-3,000	800
M19			100 psi @ 80-120 cfm	1.5	300-3,000	7,000
M20			100 psi @ 120-170 cfm	2.2	300-2,500	15,000

*Carries independent testing laboratory approval. ‡Motor suitable for hazardous areas that do not require independent certification.

†An air motor is a non-electrical device meaning possibility of explosion from igniting flammables/combustibles is reduced. Air motor performance will depend upon user's system setup.
Note: Motor adapters are also available to permit installation of customer supplied NEMA or IEC motors.

DIMENSIONS

Note: Dimensions are for reference only.

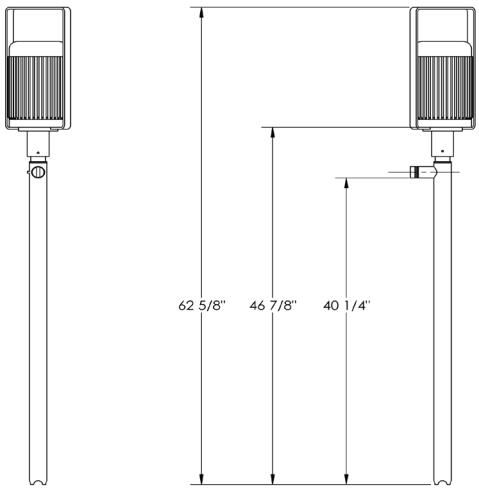

ACCESSORIES

Drum Adapters

Static Protection Kit

Discharge Hoses

finishthompson.com

FINISH THOMPSON INC. - HEADQUARTERS
921 Greengarden Road | Erie, PA 16501
800.934.9384 | ph 814.455.4478 | fx 814.455.8518
email fti@finishthompson.com

FINISH THOMPSON INC. - EUROPE CENTER
Otto-Hahn-Strasse 16 | Maintal, D-63477 Germany
49 (0)6181-90878-0 | fx 49 (0)6181-90878-18
email fti@finishthompson.com