FINISH THOMPSON INC.

OPERATION AND PARTS MANUAL

DRUM PUMP MOTORS

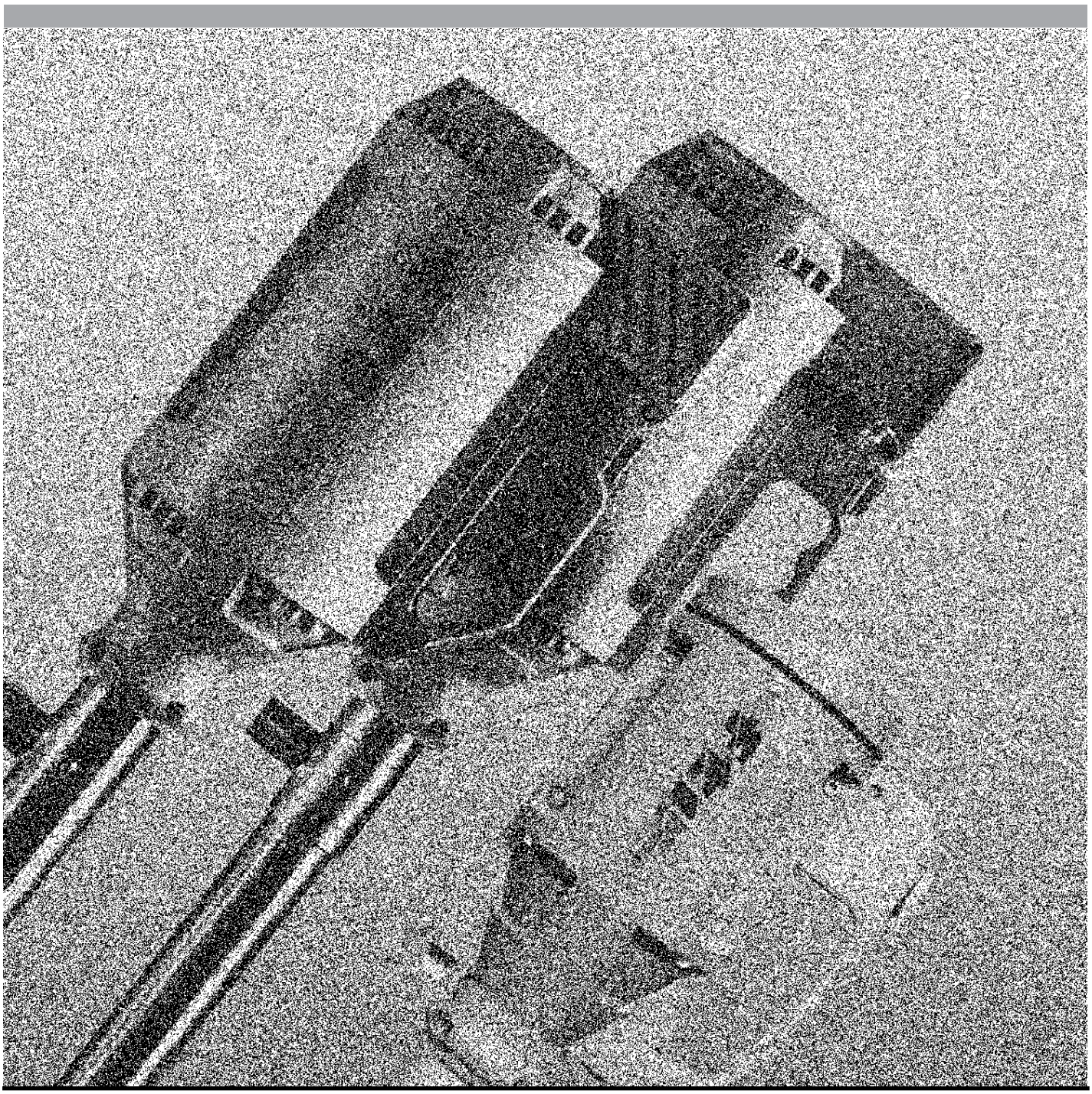

Models: M3 M5 M3T M3X M5T M5X M6 M6X M7T M7X M10X M15-M40 M58P M59P

FINISH THOMPSON INC.
921 Greengarden Road • Erie, PA 16501-1591 U.S.A.
Ph 814-455-4478 • Fax 814-455-8518
Email fti@finishthompson.com • www.finishthompson.com

EU Declaration of Conformity

CE

Finish Thompson Inc. hereby declares that the following electrical equipment fully complies with the applicable health and safety requirements as specified by the EU directives listed. The product may not be taken into service until it has been established that the driven Drum and Container Pump complies with the provisions of all relevant EU Directives provided pumps manufactured by Finish Thompson are used.

This declaration is valid provided that the devices are fully assembled and no modifications are made to these devices.

Type of Device:
Electric Motors for Driving Drum
and Container Pumps

Models:
M3V-UK M5 M5T M5V M5X M10X
M13 M59P M59H S2 S3

EU Directives (and their applicable amendments):
Low Voltage (2014/35/EU)
Electromagnetic Compatibility (2014/30/EU)

Specific standards applied:
EN 60335-1 EN60335-2-41
EN 55014-1 EN 55014-2
EN 60529

Signed,

Casey D. Bowes
CEO and President

20 April 2016

Person(s) Authorized to Compile Technical File: Finish Thompson GmbH
Otto-Hahn-Strasse 16
Maintal, D-63477 DEU
Telephone: 49 (0)6181-90878-0

FINISH THOMPSON INC.
921 Greengarden Road • Erie, PA 16501-1591 U.S.A.
Ph 814-455-4478 • Fax 814-455-8518
Email fti@finishthompson.com • www.finishthompson.com

EU DECLARATION OF CONFORMITY

Finish Thompson Inc. hereby declares that the following machines fully comply with the applicable health and safety requirements as specified by the EU Directives listed. This declaration is valid provided that the devices are fully assembled and no modifications are made to these machines.

Type of Device:
Pump Motor

Pump Motor Models:
M10X

EU Directives:
Equipment and protective systems intended for use in potentially explosive atmospheres (2014/34/EU)

EC-Type Examination:
Physical Technical Testing Institute 1026
Ostrava-Radvanice
FTZU 08 ATEX 0083X

Product Quality Assurance Notification:
Physical Technical Testing Institute 1026
Ostrava-Radanice
FTZU 08 ATEX Q 003

Applicable Harmonized Standards:
EN 60079-0:2012
EN 60079-1:2014

Casey D. Bowes
CEO and President
April 20, 2016

FINISH THOMPSON INC.
921 Greengarden Road • Erie, PA 16501-1591 U.S.A.
Ph 814-455-4478 • Fax 814-455-8518
Email fti@finishthompson.com • www.finishthompson.com

EU Declaration of Conformity

CE

Finish Thompson Inc. hereby declares that the following machine(s) fully comply with the applicable health and safety requirements as specified be the EC Directives listed. The product may not be taken into service until it has been established that the driven Drum and Container pump complies with the provisions of all relevant EC Directives. The complete product complies with the provisions of the EC Directive on machinery safety provided pumps manufactured by Finish Thompson Inc. are used.

This declaration is valid provided that the devices are fully assembled and no modifications are made to these devices.

Type of Device:
Air Motors for Driving Drum
and Container Pumps

Models:
M6 M6X M18 M19 M20 M57
M65 M66 S4

EC Directives:
Machinery Safety (2006/42/EC)

Applied Harmonized Standards:
EN ISO 12100 Part 1
EN ISO 12100 Part 2
EN 983

Manufacturer: Finish
Thompson Inc.
921 Greengarden Road
Erie, Pennsylvania 16501-1591 U.S.A

Signed,

Corey D Bowers

President

27 February 2015

Person(s) Authorized to Compile Technical File: Finish Thompson GmbH
Otto-Hahn-Strasse 16
Maintal, D-63477 DEU
Telephone: 49 (0)6181-90878-0

TABLE OF CONTENTS

Introduction 6

Warranty and Return Policy 6

Safety Precautions 7

Maintenance Precautions 7

Installation 8

M3 & M5 Models 9
Assembly Drawing and Parts List

M3T & M5T Models 10
Assembly Drawing and Parts List

M7T Models 11
Assembly Drawing and Parts List

M6 Model 12
Assembly Drawing and Parts List

M6X Model 13
Assembly Drawing and Parts List

M3X, M5X, M7X & M10X Models 14

BT Models 14
Assembly Drawing and Parts List

M58P-M59P Models 15
Assembly Drawing and Parts List

Static Protection Kit 16

TABLA DE CONTENIDO

Introducción 6

Garantía y Póliza de Devolución 6

Precauciones de Seguridad 7

Precauciones de Mantenimiento 7

Instalación 8

Modelos M3& M5 9
Dibujo de Armadura y Lista de Partes

Modelos M3T & M5T 10
Dibujo de Armadura y Lista de Partes

Modelos M7T 11
Dibujo de Armadura y Lista de Partes

Modelo M6 12
Dibujo de Armadura y Lista de Partes

Modelo M6X 13
Dibujo de Armadura y Lista de Partes

Modelos M3X, M5X, M7X & M10X 14

Modelo BT 14
Dibujo de Armadura y Lista de Partes

Modelos M58P, M59P 15
Dibujo de Armadura y Lista de Partes

Guias para el Equipo de Protección Estático ... 17

INTRODUCTION

FTI has been an international designer and manufacturer of drum pumps and mixers for over twenty years. We make drum pump selection easy with our complete line of interchangeable motors and tubes. When properly installed and operated, your Finish Thompson drum pump or mixer will provide long, trouble free service.

INTRODUCCIÓN

FTI ha sido diseñador y fabricante internacional de bombas de tambor y mezcladoras por más de veinte años. Hacemos selección de bombas de tambor fácil con nuestra línea completa de motores y tubos intercambiables. Cuando se instala y se maneja correctamente, su bomba de tambor o mezcladora Finish Thompson le dará servicio por un largo tiempo y sin problemas.

WARRANTY

Finish Thompson, Inc (manufacturer) warrants this product to be free of defects in materials and workmanship for a period of one year from date of purchase by original purchaser. If a warranted defect, which is determined by manufacturer's inspection, occurs within this period, it will be repaired or replaced at the manufacturer's option, provided (1) the product is submitted with proof of purchase date and (2) transportation charges are prepaid to the manufacturer. Liability under this warranty is expressly limited to repairing or replacing the product or parts thereof and is in lieu of any other warranties, either expressed or implied. This warranty does apply only to normal wear of the product or components. This warranty does not apply to products or parts broken due to, in whole or in part, accident, overload, abuse, chemical attack, tampering, or alteration. The manufacturer accepts no responsibility for product damage or personal injuries sustained when the product is modified in any way. If this warranty does not apply, the purchaser shall bear all cost for labor, material and transportation.

Manufacturer shall not be liable for incidental or consequential damages including, but not limited to process down time, transportation costs, costs associated with replacement or substitution products, labor costs, product installation or removal costs, or loss of profit. In any and all events, manufacturer's liability shall not exceed the purchase price of the product and/or accessories.

GARANTÍA

Finish Thompson, Inc (el fabricante) garantiza este producto contra todo defecto de materiales y mano de obra durante un periodo de un año des de la fecha de adquisición por parte del comprador original. Si, dentro de este periodo, se detecta algún defecto cubierto por la garantía mediante una inspección del fabricante, éste se encargará de corregirlo, mediante reparación o sustitución, a su elección, siempre y cuando: (1) el producto le sea devuelto con algún comprobante de la fecha de compra y (2) a portes pagados. La responsabilidad de esta garantía se limita expresamente a la reparación o sustitución del producto o de partes del mismo, y sustituye a cualquier otra garantía expresa o implícita. Esta garantía sólo se aplica al desgaste del producto o de sus componentes derivado del uso normal. No es aplicable a productos o piezas cuya rotura se deba, en todo o en parte, a accidentes, sobrecargas, abusos, agresión química, manipulación o alteración. El fabricante declina toda responsabilidad por daños en el producto o lesiones personales que se produzcan después de modificar el producto en cualquier forma. Si el comprador no hace valer esta garantía, deberá asumir todos los gastos de mano de obra, material y transporte.

El fabricante no es responsable de los daños consecutivos o resultantes incluidos, aunque sin limitación, los relacionados con la parada de procesos, costes de transporte, costes asociados a la sustitución de productos, costes de mano de obra, costes de retirada o instalación de productos, o perdida de beneficios. En cualquier caso, la responsabilidad del fabricante no sobrepasará el precio de compra del producto y/o los accesorios.

RETURN POLICY

Should you have any problems with this product, please contact the distributor in your area. The distributor will then determine if a return to the factory is necessary and will contact the factory for a return authorization number.

Call our toll free Technical Service Hot Line, 1-800-888-3743, if you have any questions regarding product operation or repair.

PÓLIZA DE DEVOLUCIÓN

Si usted tiene cualquier problema con este producto, por favor póngase en contacto con el distribuidor en su area. Entonces el determinará si una devolución a la fábrica es necesaria y se pondrá en contacto con la fábrica para obtener un número de autorización de devolución.

Llame nuestro servicio técnico al numero 814-455-4478 si tiene pregunts de operación o reparación.

SAFETY PRECAUTIONS

ALWAYS wear protective clothing, eye protection and follow standard safety procedures when handling corrosive or personally harmful materials.

NEVER use a plastic pump or an open, splashproof or TEFC motor when pumping or mixing flammable or combustible material.

ALWAYS use and store in an upright position.

NEVER immerse motor in liquid.

ALWAYS place motor in the OFF position prior to connecting the power source.

ALWAYS check motor label plate for the correct power supply requirements.

ALWAYS have manufacturer, its service agent or similarly qualified persons replace supply cord if damaged in order to avoid a hazard.

ALWAYS use an approved plug for Class I, Division 1, Group C & D applications on the X Series motors.

Noise level at a distance of 3 feet:

S Series - M3, M5	73 db (Splash proof)
T Series - M3T, M5T	77 db (Totally enclosed fan cooled)
A Series - M6 at 80 psi line pressure	90 db (Air)
M58P & M59P	85 db (800 watt)

PRECAUCIONES DE SEGURIDAD

SIEMPRE use ropa protectiva, protección para los ojos y siga procedimentos de seguridad básicos cuando maneje materiales corrosivos.

NUNCA use una bomba de plástico en los motores abiertos, contra salpiqueos o TEFC cuando se bombéa o se mezcla materiales combustibles o inflamables.

SIEMPRE use y almacene recto.

NUNCA sumerga el motor en líquido.

SIEMPRE ponga el motor en la posición OFF antes de conectar la corriente electrica.

SIEMPRE revise la placa por los requerimientos correctos de corriente electrica.

SIEMPRE use un enchufe aprovado para la Clase I, la Division 1, las aplicaciones de los Grupos C & D en el motor de la Serie X.

Nível de ruido a una distancia de 3 pies:

Serie S - M3, M5	73 db (Contra alpiqueos)
Serie T - M3T, M5T	77 db (TEFC -Totalmente sellada con ventilación)
A Series M6 at 80 psi línea de presión	90 db (Aire)
M58P y M59P	85 db (800 watt)

MAINTENANCE PRECAUTIONS

ALWAYS store motor upright and away from corrosive liquids and vapors.

ALWAYS use an automatic air line lubricator, moisture trap and filter in the airline ahead of an air motor. (Use detergent SAE #10 in lubricator). Do not exceed 80 psi (551 kPa) on M6 and 100 psi (689 kPa) on all other air motors.

Motor Models M3, M3T, M5, M5T, M58P and M59P are 10,000 rpm. Motor brushes in these models should be replaced every 200-300 operating hours to assure trouble free service.

Motor Models M3, M3T, M5, M5T, M7T, M8T, M58P andM59P contain a circuit breaker (overload). If motor will not operate, check the circuit breaker.

Motor Models M3X and M5X have a 400-600 operating hour brush life. Model M10X has a 200-300 operating hour brush life. M3X, M5X and M10X motor brushes require factory replacement.

PRECAUCIONES DE MANTENIMIENTO

SIEMPRE guarde el motor en una posición vertical lejos de líquidos o vapores corrosivos.

SIEMPRE use un lubricador automático con trampa de humedad y filtro en la línea de aire antes del motor. (Use el detergente SAE número 10 en el lubricador). No excede de 80 psi (551 kPa) con el motor M6 o 100 psi (689 kPa) con todos los otros motores de aire.

Modelos de motor M3, M3T, M5, M5T, M58P y M59P operan a 10,000 rpm. Los cepillos de motor en estos modelos deben ser reémplazados cada 200-300 horas de operación para asegurarse de un servicio libre de problemas.

Modelos de motor M3, M3T, M5, M5T, M7T, M8T, M58P y M59P contenen un disyuntor (sobrecarga). Si el motor no opera, revise el disyuntor.

Los modelos M3X y M5X del motor tienen una vida del cepillo de la hora de funcionamiento 400-600. El modelo M10X tiene una vida del cepillo de la hora de funcionamiento 200-300. Los cepillos del motor de M3X, de M5X y de M10X requieren el reemplazo de la fábrica.

INSTALLATION

INSTALACIÓN

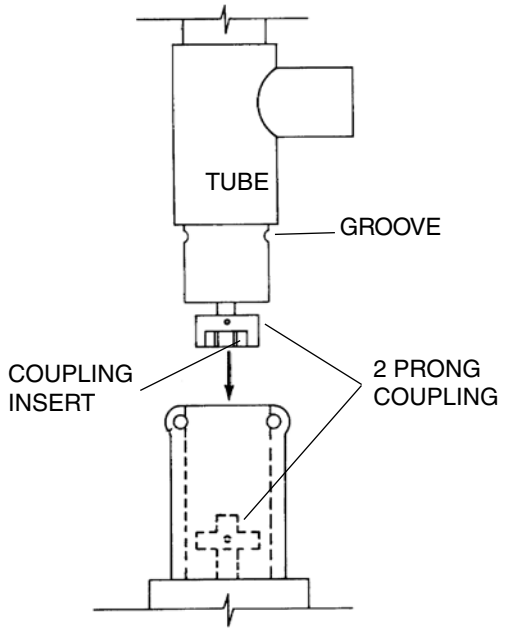

MOTOR WITH ADAPTER

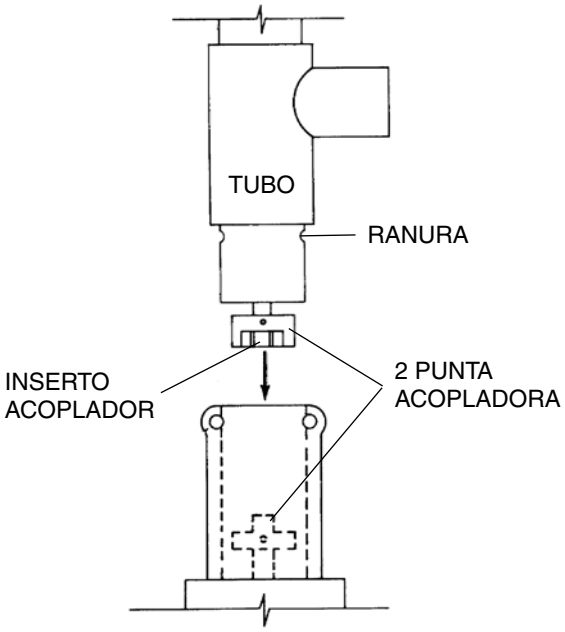

MOTOR CON ADAPTADOR

Figure 1

Unpack motor from carton and check for shipping damage. Unpack pump/mixer from carton. Check for shipping damage.

If any shipping damage is found, save the packaging and notify the carrier immediately.

1. Ensure motor and pump compatibility. I.E., labeling.
2. Remove 2 socket head screws and nuts.
3. Ensure no obstructions on the coupling of either motor or pump/mixer.
4. Position couplings and coupling insert for proper alignment.
5. Slide pump/mixer down into motor until couplings mate and pump/mixer is seated properly. Refer to Figure 1.
6. Position motor so mounting holes line up with corresponding grooves on pump/mixer. (Note: Always position electric cord away from discharge spout of pump.)
7. Install 2 socket head screws and nuts in mounting holes and tighten securely.
8. Check to ensure that the motor is secured to the pump/mixer before operating. If not, repeat steps 1-6.

Saque el motor del cartón y revise por daños de embarque. Saque la bomba (o mezclador) del cartón y revise por daños de embarque.

Si se encuentran daños de embarque, póngase en contacto con el suplidor del producto para reémplazarlo o reparario.

1. Asegúrese de la compatibilidad entre el motor y la bomba. I.E. La etiqueta.
2. Remove 2 tornillos de cabeza de caquillo y tuercas.
3. Asegúrese de que no haya obstrucciones en el acoplador de el motor o la bomba (o mezclador).
4. Coloque el acoplador y el inserto acoplador para una alineación correcta.
5. Deslize la bomba (o mezclador) hacia abajo en el motor hasta que el acoplador y la bomba (o mezclador) esten asentadas correctamente. Vea la Figura 1.
6. Coloque el motor para que los huecos de la estructura y las ranuras correspondientes esten alineadas en la bomba (o mezclador). (Note: Siempre coloque la conexión electrica lejos del caño de descargar de la bomba.)
7. Instale 2 tornillos de cabeza de caquillo y tuercas en los huecos de la estructura y aprietelos seguros.
8. Revise para asegurarse que el motor esté amarrado a la bomba (o mezclador) antes de operar. Si no está, repita los pasos 1-6.

M3 & M5 MODELS

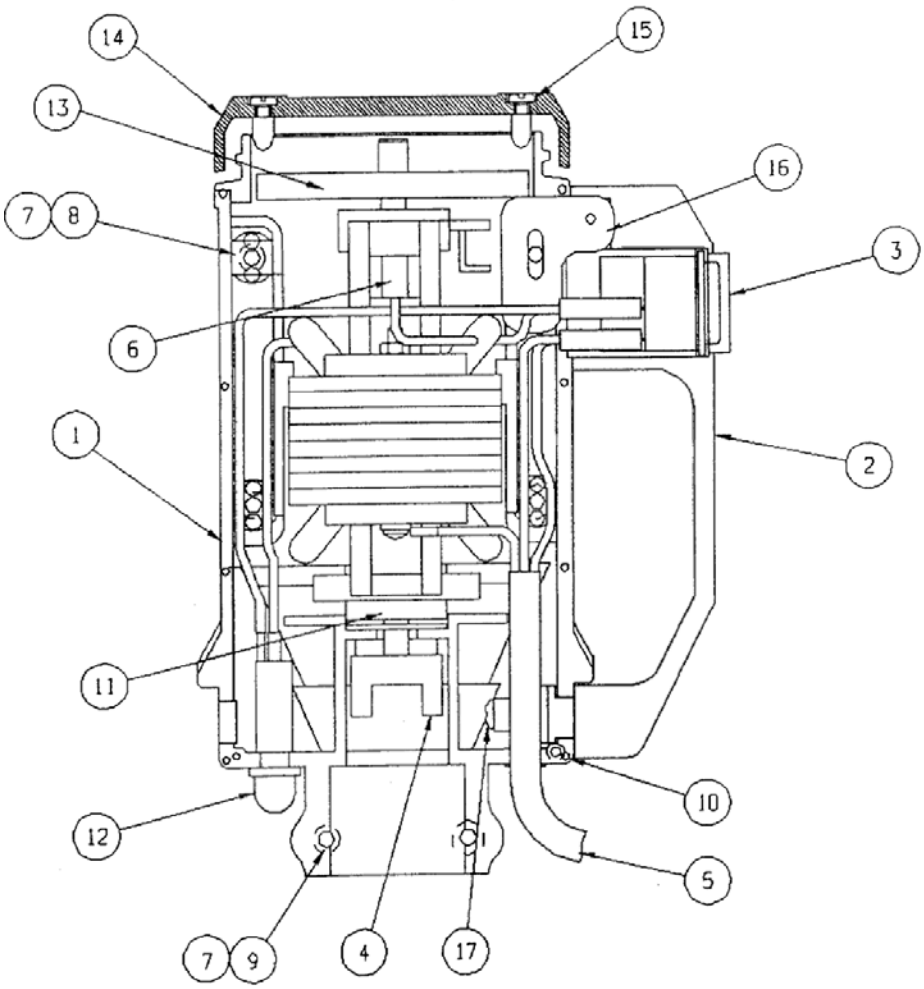

Item	Quantity M3	Quantity M5	Description	Part Number
1	1	1	HSG Repair Kit	A101493
2	1	1	Handle	M101668
3	1	1	Switch	A101690
4	1	1	Half Coupling	J100012
5	1	–	Cord Assembly	A102050
5	–	1	Cord Assembly	A102051
6	2	2	Brush	107764
7	6	6	Housing Nut	J100990
8	4	4	Housing Screw	J100022
9	2	2	Socket Head Cap Screw	108392

Item	Quantity M3	Quantity M5	Description	Part Number
10	3	3	Screw	J102275
11	1	1	Bearing Kit	A101018
12	1	–	Circuit Breaker w/Cover	A100854
12	–	1	Circuit Breaker w/Cover	A102182
13	1	1	Fan Blade	J101510
14	1	1	Motor Fan Cover	M101710
15	4	4	Cover Screw	J101020
16	1	1	Handle Mounting Block	M101666
17	2	2	Screw	J103715

Note: Motor housing repair kits include motor covers, labels and screws to repair the motor should it be damaged.

M3T & M5T MODELS

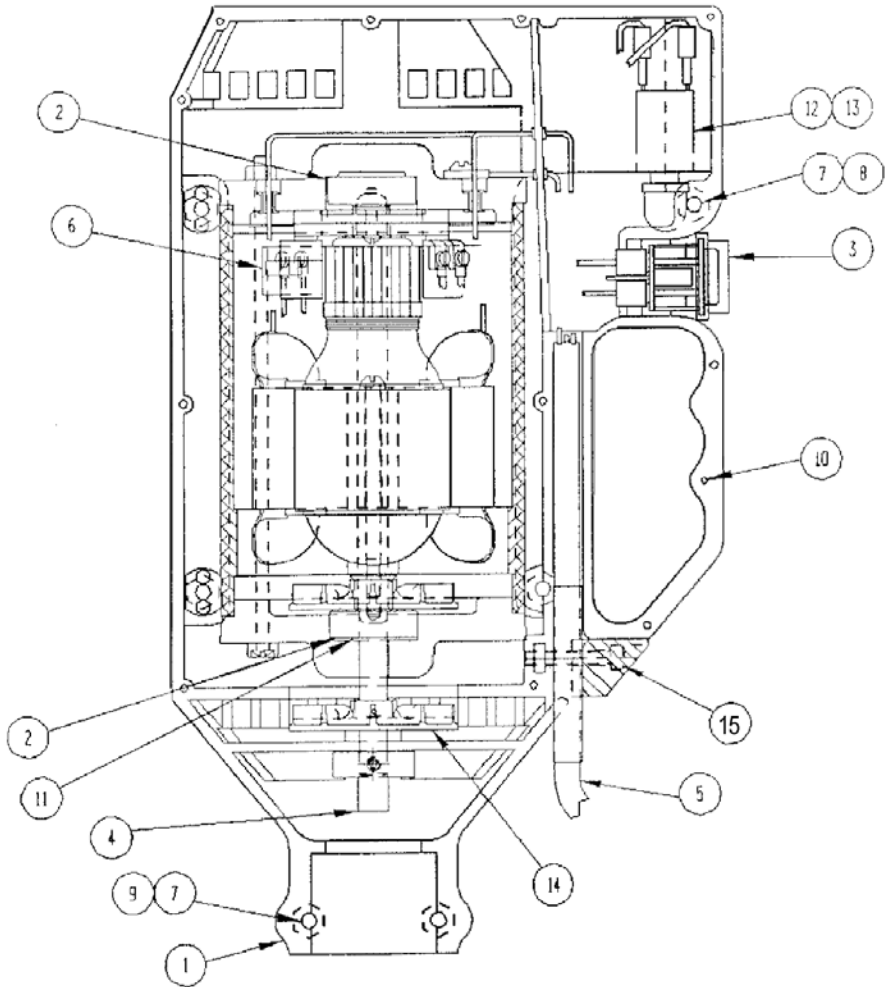

Item	Quantity M3T	Quantity M5T	Description	Part Number
1	1	1	HSG Repair Kit	A101416
2	2	2	Ball Bearing	J101069
3	1	1	Switch	A101690
4	1	1	Half Coupling	J100013
5	1	–	Cord Assembly	A101738
5	–	1	Cord Assembly	A101740
6	2	2	Brush	J101107
7	6	6	Housing Nut	J100990

Item	Quantity M3T	Quantity M5T	Description	Part Number
8	4	4	Socket Head Cap Screw	108392
9	2	2	Mounting Bolt	J101690
10	2	2	Screw	J101530
11	1	1	Wave Washer	J101126
12	1	–	Circuit Breaker	J103796
12	–	1	Circuit Breaker	J101149
13	1	1	Cover	J100789
14	1	1	Fan Blade	J101094
15	2	2	Housing Bolt	J100022

Note: Motor housing repair kits include motor covers, labels and screws to repair the motor should it be damaged.

M7T MODELS

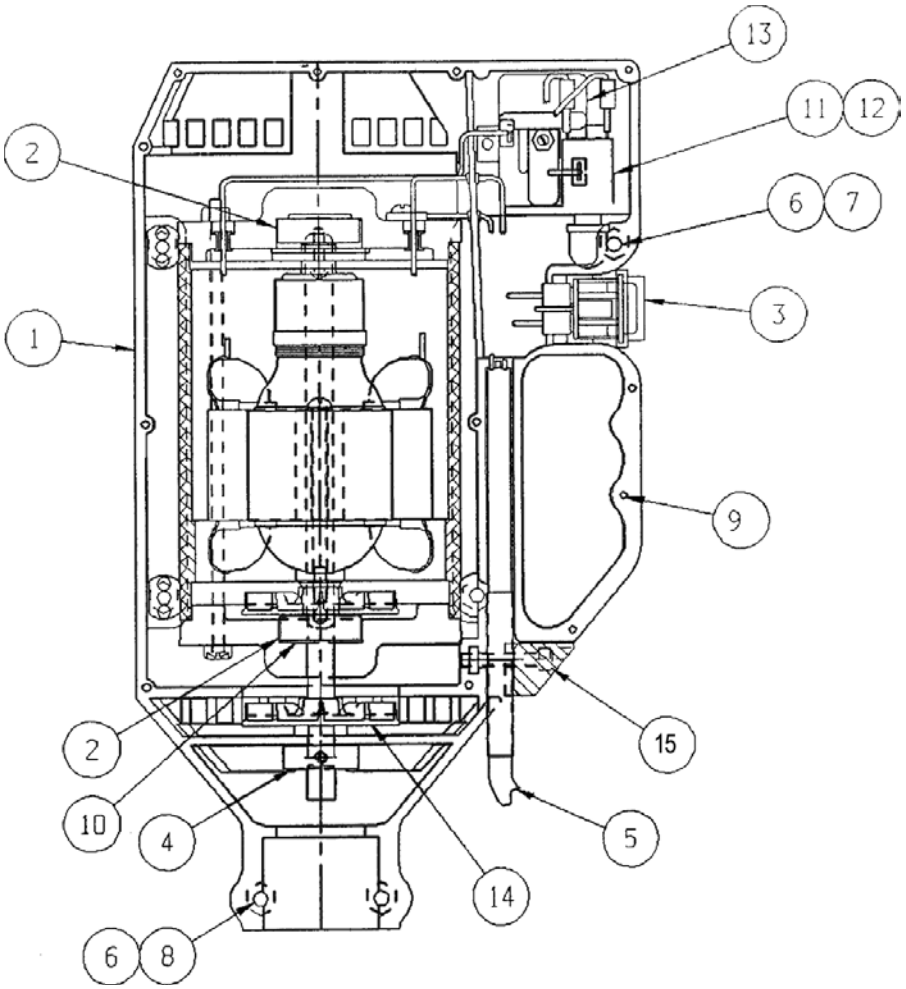

Item	Quantity M7T	Description	Part Number
1	1	Housing Repair Kit	A101416
2	2	Ball Bearing	J101069
3	1	Switch	A101690
4	1	Half Coupling	J100013
5	1	Cord Assembly	A101748
5	–	Cord Assembly	A101751
6	6	Housing Nut	J100990
7	4	Socket Head Cap Screw	108392
8	2	Mounting Bolt	J101690

Item	Quantity M7T	Description	Part Number
9	2	Screw	J101530
10	1	Wave Washer	J101126
11	1	Circuit Breaker	J101150
11	–	Circuit Breaker	J101149
12	1	Cover	J100789
13	1	Start Relay	J101147
13	–	Start Relay	J101804
14	1	Fan Blade	A102024
15	2	Housing Bolt	J100022

Notes: (1) Motor housing repair kits include motor covers, labels and screws to repair the motor should it be damaged.
(2) Contact factory for information on M8T.

M6 MODEL

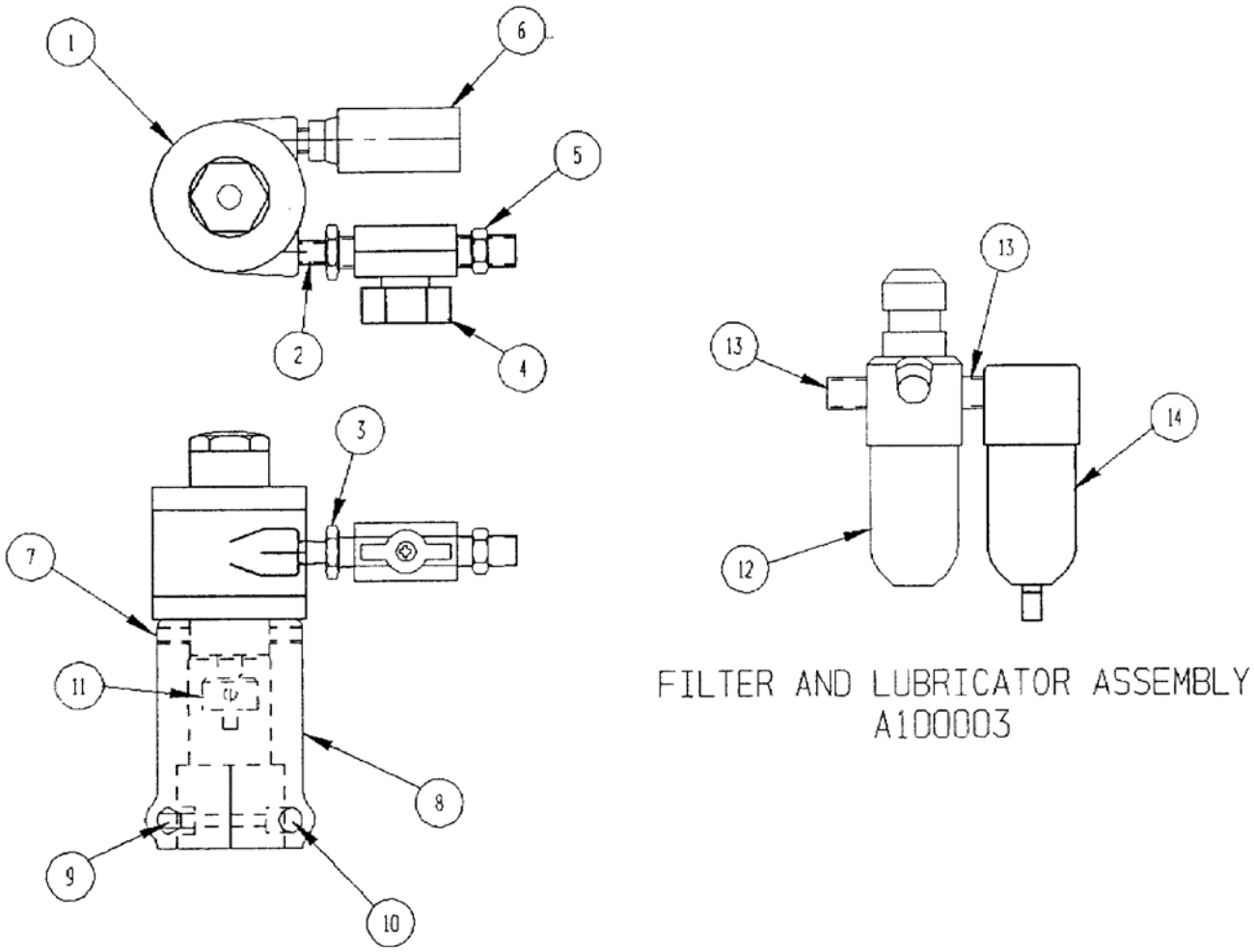

Item	Quantity M6	Description	Part Number
1	1	Air Motor	M101717
2	1	Pipe Nipple	J100107
3	1	Hex Red. Bushing	J100057
4	1	Ball Valve	J100073
5	1	Hose Fitting	J100036
6	1	Muffler	J100033
7	2	Set Screw	J100040

Item	Quantity M6	Description	Part Number
8	1	Air Motor Mount	M100013-1
9	2	Socket Head Cap Screw	108392
10	2	Hex Nut	J100990
11	1	Half Coupling	J100013
12	1	Lubricator	J100035
13	2	Pipe Nipple	J102463
14	1	Filter	J100034

Not Shown: Air Motor Repair Kit J100060

M6X MODEL

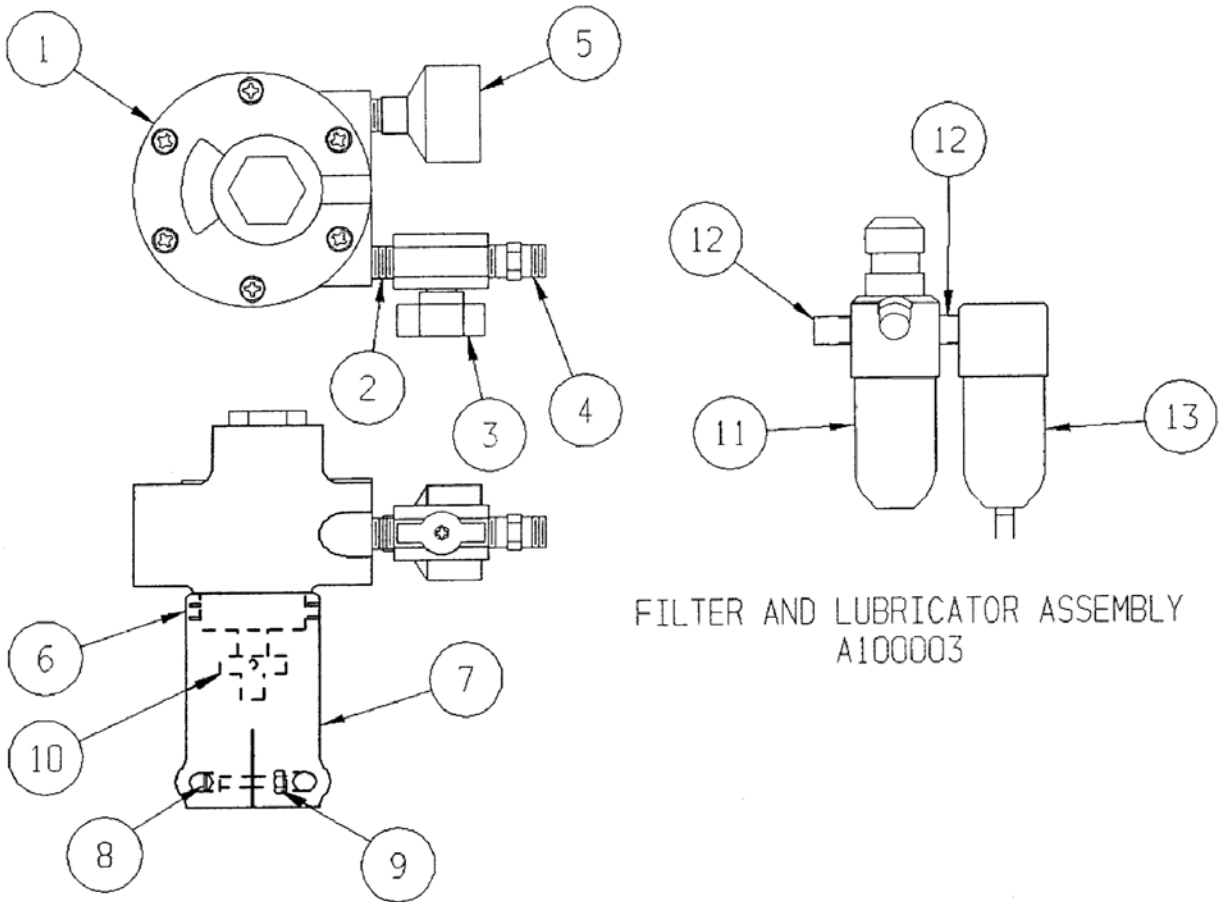

Item	Quantity M6X	Description	Part Number
1	1	Air Motor	M101720
2	1	Pipe Nipple	J102463
3	1	Ball Valve	J100073
4	1	Hose Fitting	J100036
5	1	Muffler	J100074
6	2	Set Screw	J100040
7	1	Air Motor Mount	M100013-2

Item	Quantity M6X	Description	Part Number
8	2	Socket Hd. Cap Screw	108392
9	2	Hex Nut	J100990
10	1	Half Coupling	J101500
11	1	Lubricator	J100035
12	2	Pipe Nipple	J102463
13	1	Filter	J100034

Not Shown: Air Motor Repair Kit J100075

M3X, M5X, M7X & M10X MODELS

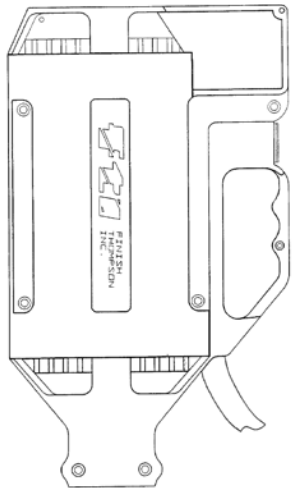

The “X” Series motor housing repair kit number is A101455. Repairs to any item other than the thermoplastic enclosure voids warranty.

Note: Motor housing repair kits include motor covers, labels and screws to repair the motor should it be damaged.

El kit de reparación del motor de la Serie “X” es A101455. El hacer reparaciones a cualquier cosa aparte de la cubierta termoplástico anula la garantía.

M15-M40 MODELS

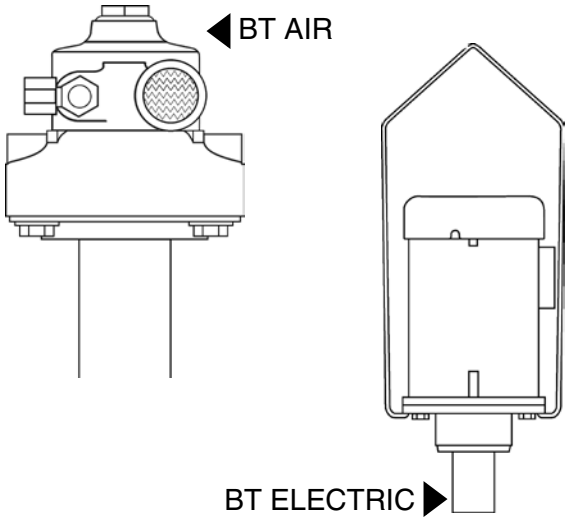

Air	TEFC	EXP
M18	M15	M24
M19	M16	M25
M20	M17	M26
	M27	M33
	M28	M34
	M29	M35
	M39 (50 Hz)	
	M40 (50 Hz)	

Please consult factory for repairs to any of the above listed motors.

M58P-M59P MODELS

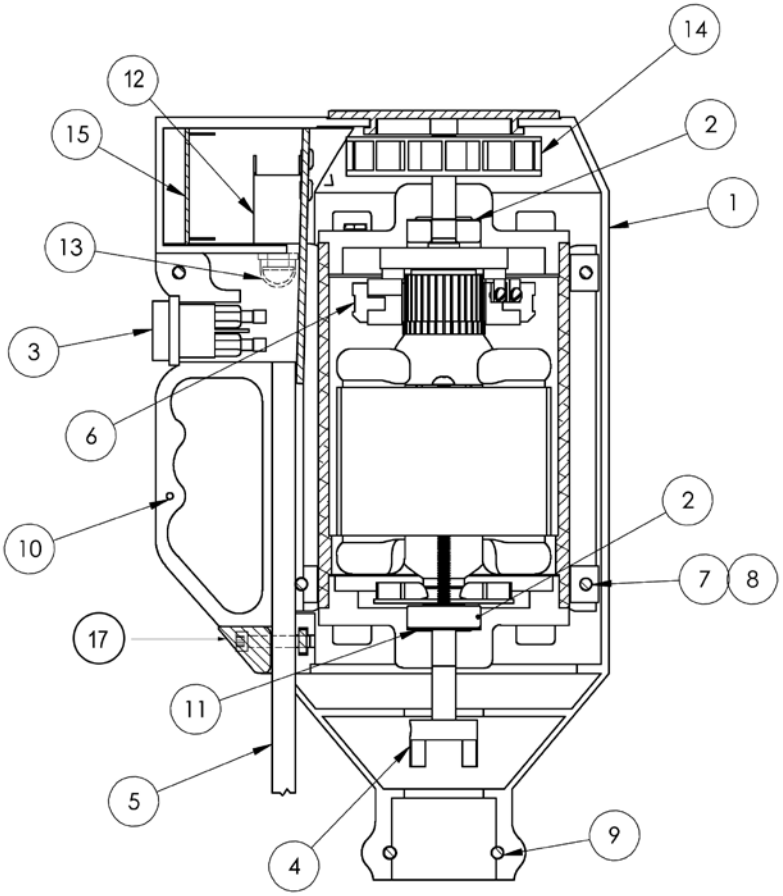

Item	Quantity M58P	Quantity M59P	Description	Part Number
1	1	1	Housing Repair Kit	105145
2	1	1	Ball Bearing	J101069
3	1	1	Switch	A101690
4	1	1	Half Coupling	J100013
5	1	–	Cord Assembly	A101738
5	–	1	Cord Assembly	106732
6	2	2	Brush	J101107
7	6	6	Housing Nut	J100024
8	4	4	Socket Head Cap Screw	108392
9	2	2	Mounting Bolt	J101690
10	3	3	Screw	J101530

Note: Housing Repair Kit includes motor covers, labels, & screws to repair the motor should it be damaged.

Item	Quantity M58P	Quantity M59P	Description	Part Number
11	1	1	Wave Washer	J101126
12	1	–	Circuit Breaker	J103796
12	–	1	Circuit Breaker	J101149
13	1	1	Cover	J100789
14	1	1	Fan	105105
15	1	1	Speed Control	106086
15	1	–	Potentiometer	108176-3
15	–	1	Potentiometer	108176-4
*16	1	1	Speed Control Knob & Cover	108414
17	2	2	Housing Bolt	J100022

*Not shown

STATIC PROTECTION KIT

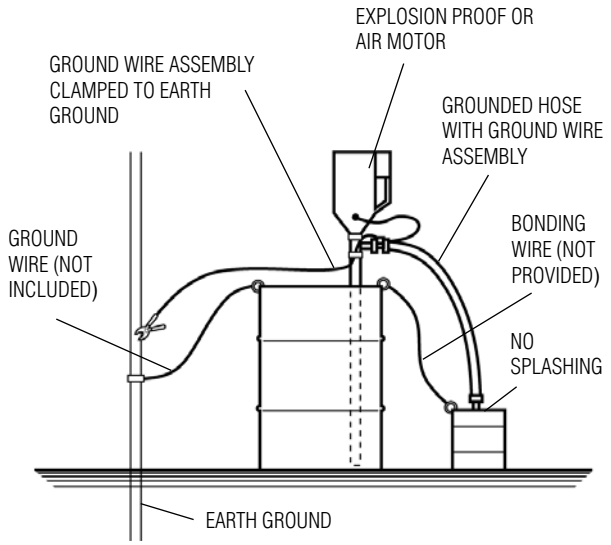

DRUM PUMP

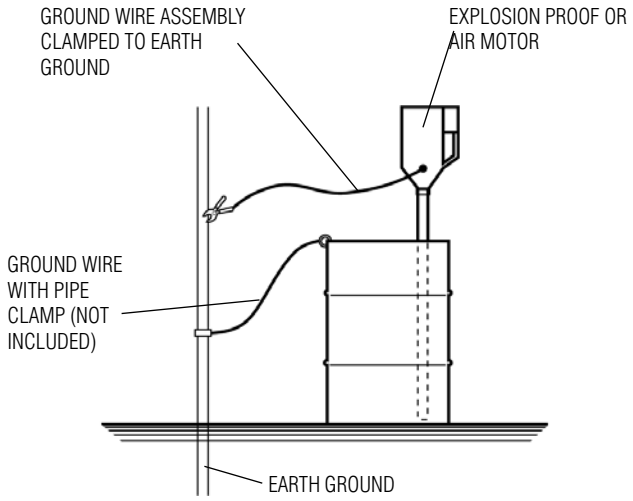

MIXER

DRUM PUMP INSTALLATION

1. Install the pump and Static Protection Kit as described and shown.
2. Connect ground wire assembly to earth ground using supplied clamp.
3. Connect ground wire between drum and earth ground.
4. Connect ground wire between receiving container and earth ground (or use bonding wire to connect to drum).

⚠ CAUTION - Check electrical continuity of all components before pumping. All should be one (1) ohm or less.

TUBE MIXER INSTALLATION

1. Install the mixer and Static Protection Kit as described and shown.
2. Connect ground wire assembly to earth ground using supplied clamp.
3. Connect ground wire between drum and earth ground.

⚠ CAUTION - Check electrical continuity of all components before pumping. All should be one (1) ohm or less.

OPERATION AND SAFETY GUIDELINES

- Use only metallic pump tubes with explosionproof motors to transfer flammable or combustible liquids.
- Area for use must comply with NFPA 30 guidelines for safe storage and use of flammable and combustible liquids.
- All containers and other equipment must be metal and grounded.
- Follow NFPA 77 guidelines for control of static electricity.
- Avoid splashing. Splash filling can create static electricity and is extrememly hazardous.
- Fluid velocity must be 3 feet/second maximum (7 GPM in 1" hose).

EQUIPO DE PROTECCIÓN ESTÁTICO

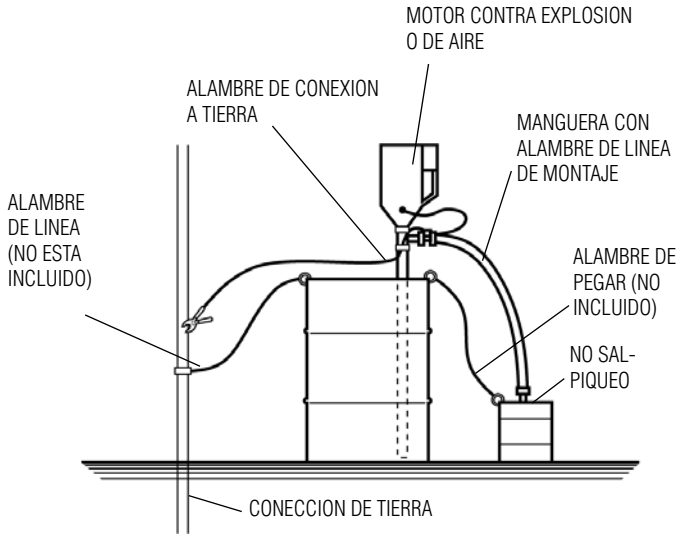

DRUM PUMP

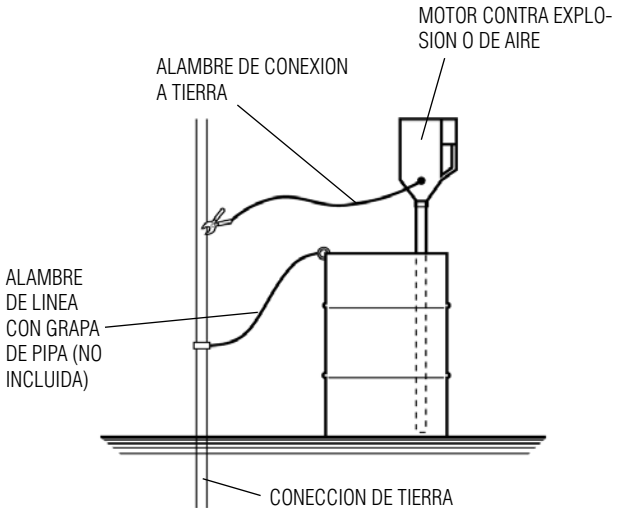

MIXER

INSTALACIÓN DE LA BOMBA DE MOTOR

1. Instale la bomba y el Equipo de Protección Estático como se describe y se muestra.
2. Conecte el alambre a la conección de tierra, usando la grapa que se le ha surtido.
3. Conecte el alambre de tierra entre el tambor y la conexión de tierra.
4. Conecte el alambre de tierra entre el recipiente recibidor y la conección de tierra (o use alambre de pegar para conectar al tambor).

⚠ CUIDADO - Revise la continuadad eléctrica de todos los componentes antes de bombear. Todos deben ser un (1) ohm o menos.

INSTALACIÓN DEL MEZCLADOR

1. Instale la mezcladora y el Equipo de Protección Estático como se describe y se muestra.
2. Conecte el alambre a la conección de tierra, usando la grapa que se le ha surtido.
3. Conecte el alambre de línea entre el tambor y la conexión de tierra.

⚠ CUIDADO - Revise la continuadad eléctrica de todos los componentes antes de bombear. Todos deben ser un (1) ohm o menos.

GUIAS DE OPERACIÓN Y SEGURIDAD

- Use solamente tubos de bomba metálicos con motores contra explosivos para transferir líquidos combustibles o inflamables.
- El lugar de uso debe estar de acuerdo con las normas NFPA 30, para almacener seguramente líquidos combustibles y inflamables.
- Todo recipiente y otro equipo debe ser de metal y conectado a tierra.
- Siga las guias NFPA 77 para el control de electricidad estática.
- Evite salpiquear. El llenar con salpiquéo puede crear electricidad estática y es extremamente peligroso.
- La velocidad del fuido debe ser de 3 pies/segundo máximo (7 GPM en manguera de 1").

FINISH THOMPSON INC.

921 Greengarden Road • Erie, PA 16501-1591 U.S.A.
Ph 814-455-4478 • Fax 814-455-8518
Email fti@finishthompson.com • www.finishthompson.com

TECH SERVICE 1-800-888-3743
FT96-593M, J102516, Rev. 27, 7/15/2016

QUALITY PRECISION & PRIDE

AN ISO 9001 COMPANY